RAYSYSTEM

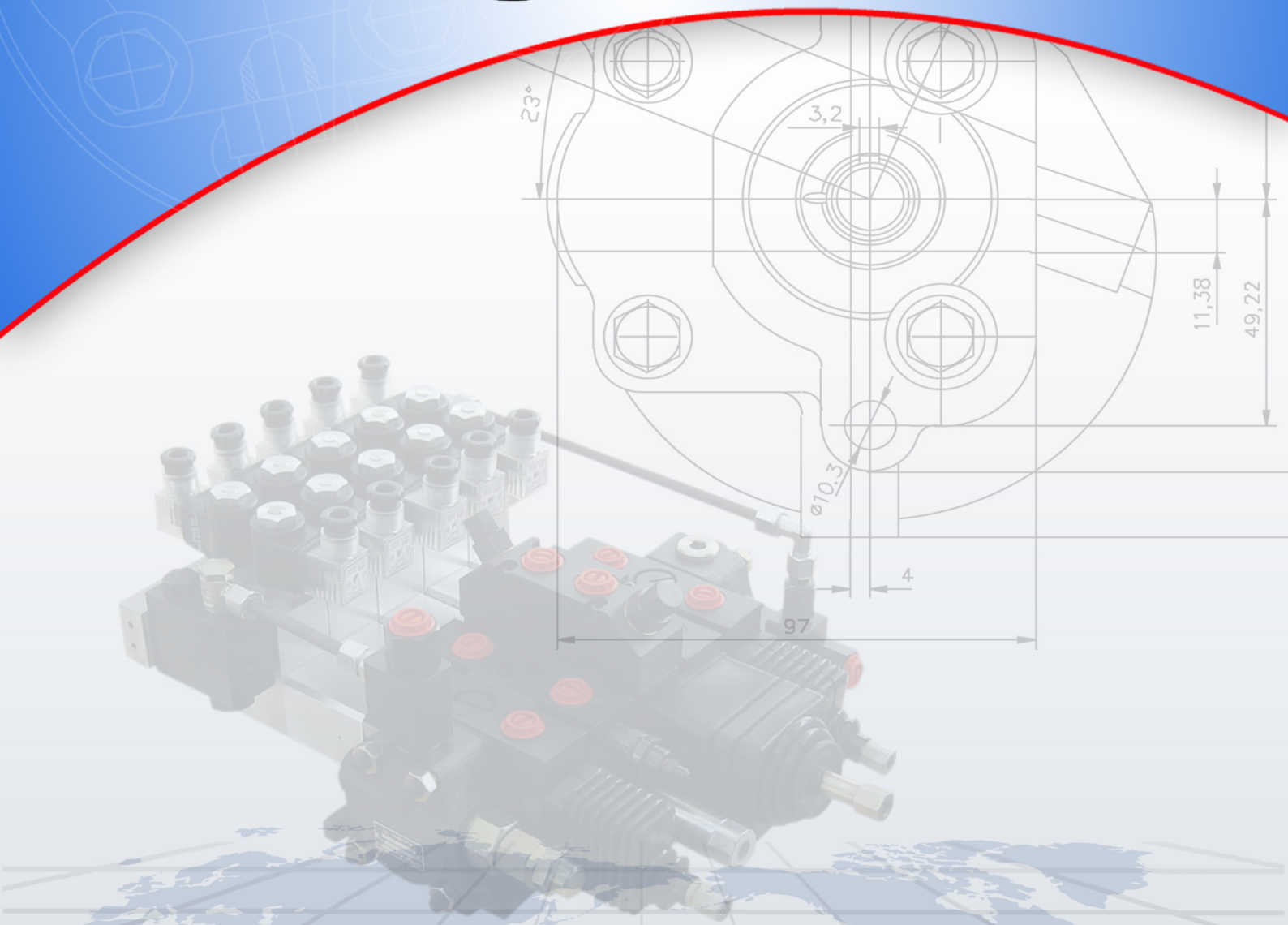

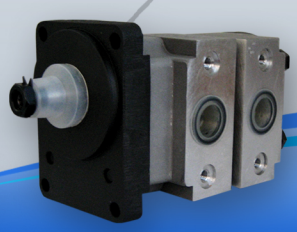

Used symbols:

q - displacement
p_{nom} - nominal pressure
n_{min} - minimal speed
n_{nom} - nominal speed
n_{max} - maximal speed
P_{nom} - power at p_{nom} and n_{nom}
P_{max} - power at p_{nom} and n_{max}

volumetric efficiencies:

η_{qmin} - at min. speed
η_{qnom} - at nom. speed
η_{qmax} - at max. speed

efficiencies:

η_{min} - at min. speed
η_{nom} - at nom. speed
η_{max} - at max. speed

q	cm^3	0.25*	0.5	0.75	1.0	1.25	1.5	1.75*	2.0*	0.30*
p_{nom}	bar	200	200	200	200	200	175	160	160	200
n_{min}	min^{-1}	750	750	750	750	750	750	750	750	750
n_{nom}	min^{-1}	1500	1500	1500	1500	1500	1500	1500	1500	1500
n_{max}	min^{-1}	3500	3500	3500	3000	2500	2000	1500	1500	3500
η_{qmin}	%	75	75	75	78	78	78	78	78	75
η_{min}	%	68	68	68	70	70	70	70	70	68
η_{qnom}	%	89	89	89	91	91	93	93	93	89
η_{nom}	%	80	80	80	83	83	85	85	85	80
η_{qmax}	%	92	92	91	91	91	91	91	91	92
η_{max}	%	82	82	82	82	83	83	83	83	82
P_{nom}	kW	0.14	0.28	0.42	0.55	0.69	0.72	0.85	0.80	0.17
P_{max}	kW	0.54	1.08	1.63	1.43	1.72	1.35	1.18	1.09	0.65

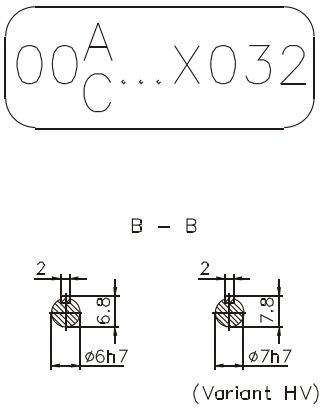

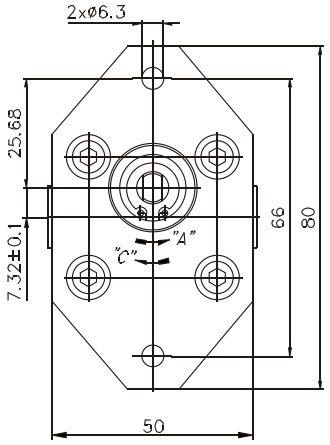

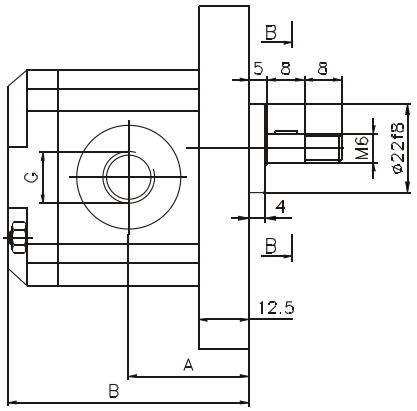

Type	Displacement	Dimensions											
		A	B	Inlet					Outlet				
				E	d	F	M	G	E	d	F	M	G
	cm³	mm		mm				"	mm				"
00A(C)0.25X032	0.25	27.6	57.2					G 1/4					G 1/4
00A(C)0.5X032	0.50	28.7	59.4					G 1/4					G 1/4
00A(C)0.75X032	0.75	29.9	61.8					G 1/4					G 1/4
00A(C)1X032	1.00	31	64					G 1/4					G 1/4
00A(C)1.25X032	1.25	32.1	66.2					G 1/4					G 1/4
00A(C)1.5X032	1.50	33.2	68.4					G 1/4					G 1/4
00A(C)1.75X032	1.75	34.3	70.6					G 1/4					G 1/4
00A(C)2X032	2.00	35.5	73					G 1/4					G 1/4
00A(C)0.30X032	0.30	27.9	57.9					G 1/4					G 1/4

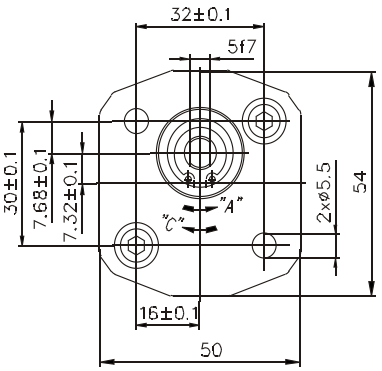

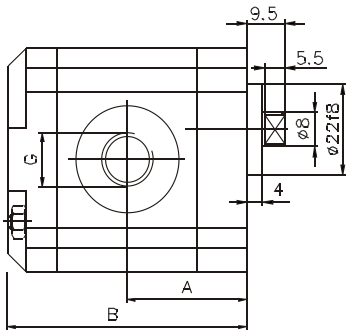

Type	Displacement	Dimensions											
		A	B	Inlet					Outlet				
				E	d	F	M	G	E	d	F	M	G
	cm³	mm		mm				"	mm				"
00A(C)0.25X033	0.25	27.6	57.2					G 1/4					G 1/4
00A(C)0.5X033	0.50	28.7	59.4					G 1/4					G 1/4
00A(C)0.75X033	0.75	29.9	61.8					G 1/4					G 1/4
00A(C)1X033	1.00	31	64					G 1/4					G 1/4
00A(C)1.25X033	1.25	32.1	66.2					G 1/4					G 1/4
00A(C)1.5X033	1.50	33.2	68.4					G 1/4					G 1/4
00A(C)1.75X033	1.75	34.3	70.6					G 1/4					G 1/4
00A(C)2X033	2.00	35.5	73					G 1/4					G 1/4
00A(C)0.30X033	0.30	27.9	57.9					G 1/4					G 1/4

Rotation "A"

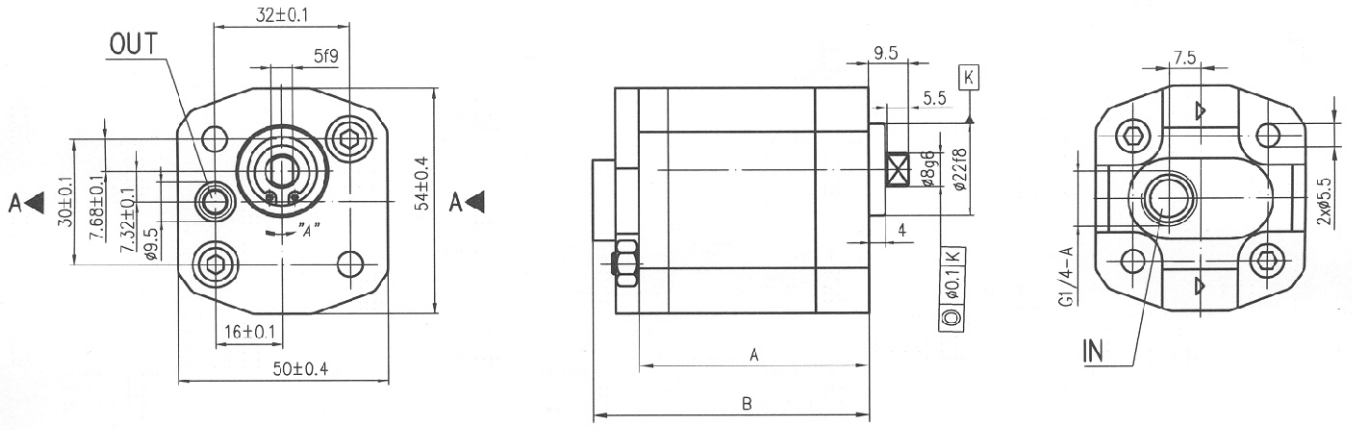

Rotation "C"

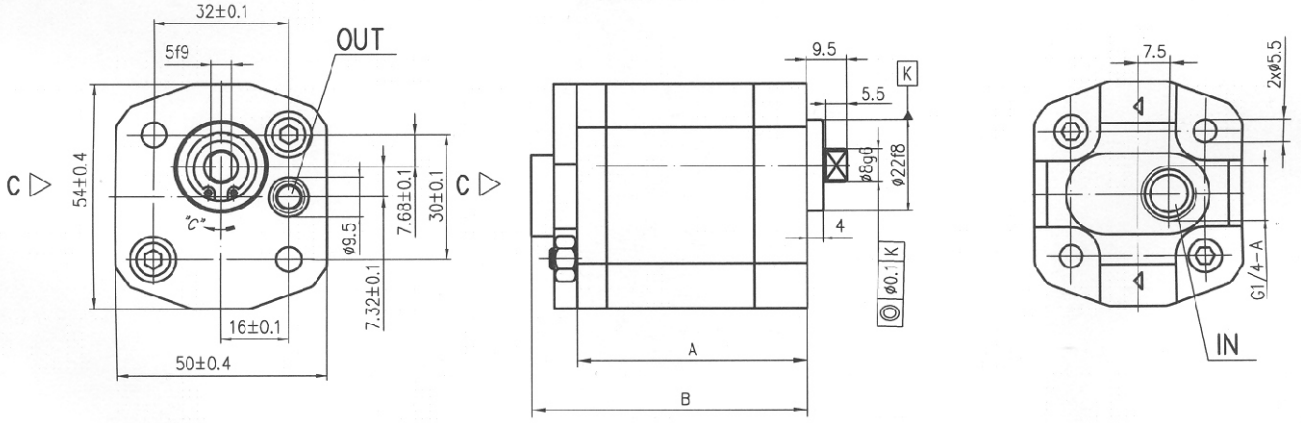

Type	Displacement	Flow		Pressure	max Speed	Dimension							
		at 1500 rpm	at max rpm	P_{nom}	n	A	B	Inlet			Outlet		
	cm^3/rev	l/min	l/min	bar	rpm	mm	mm			G			
00A(C)0,25X047	0,25	0,3	0,8	200	3500	55,3	60,8						
00A(C)0,3X047	0,3	0,4	0,9	200	3500	55,7	61,2						
00A(C)0,5X047	0,5	0,7	1,6	200	3500	57,5	63,0						
00A(C)0,75X047	0,75	1,0	2,3	200	3500	59,8	65,3						
00A(C)1X047	1	1,4	3,2	200	3500	62,0	67,5			1/4"		ø5,5	
00A(C)1,25X047	1,25	1,7	3,4	200	3000	64,2	69,7						
00A(C)1,5X047	1,5	2,1	3,5	175	2500	66,5	72,0						
00A(C)1,75X047	1,75	2,4	4,1	160	2500	68,7	74,2						
00A(C)2X047	2	2,8	3,7	160	2000	70,9	76,4						

Rotation "A"

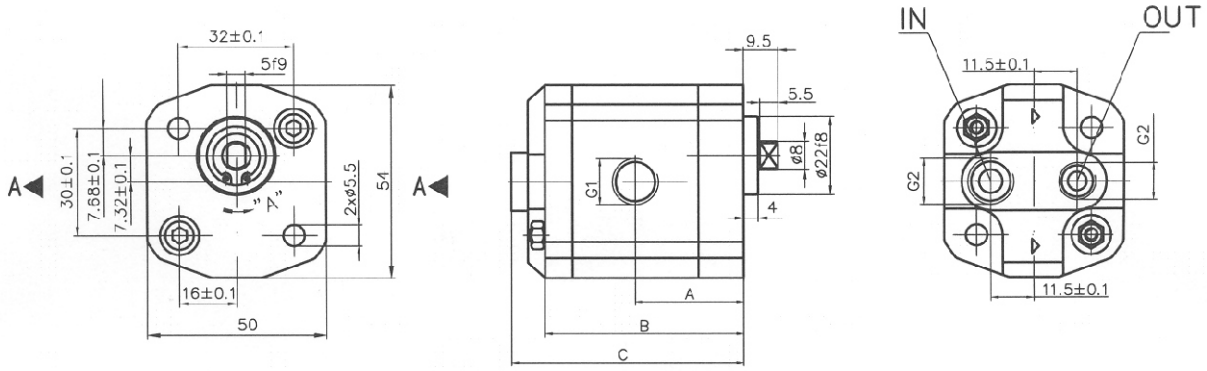

Rotation "C"

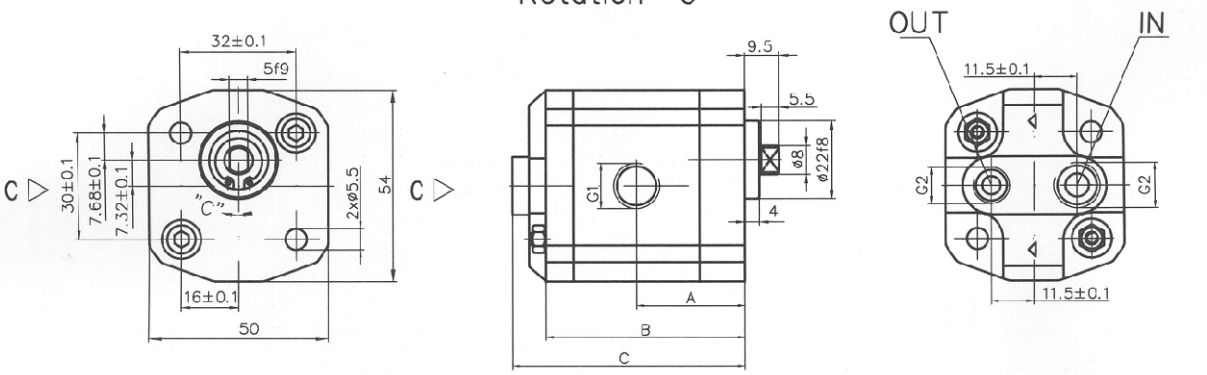

Type	Displacement	Flow		Pressure	max Speed	Dimension							
		at 1500 rpm	at max rpm	P_{nom}	n	A	B	C	Inlet			Outlet	
	cm^3/rev	l/min	l/min	bar	rpm	mm	mm		G1	G2		G1	G2
00A(C)0,25X048W1	0,25	0,3	0,8	200	3500	27,6	55,3	60,8					
00A(C)0,3X048W1	0,3	0,4	0,9	200	3500	27,7	55,7	61,2					
00A(C)0,5X048W1	0,5	0,7	1,6	200	3500	28,7	57,5	63,0					
00A(C)0,75X048W1	0,75	1,0	2,3	200	3500	29,9	59,8	65,3					
00A(C)1X048W1	1	1,4	3,2	200	3500	31,0	62,0	67,5	1/4"	1/4"		1/4"	1/8"
00A(C)1,25X048W1	1,25	1,7	3,4	200	3000	32,1	64,2	69,7					
00A(C)1,5X048W1	1,5	2,1	3,5	175	2500	33,2	66,5	72,0					
00A(C)1,75X048W1	1,75	2,4	4,1	160	2500	34,3	68,7	74,2					
00A(C)2X048W1	2	2,8	3,7	160	2000	35,5	70,9	76,4					

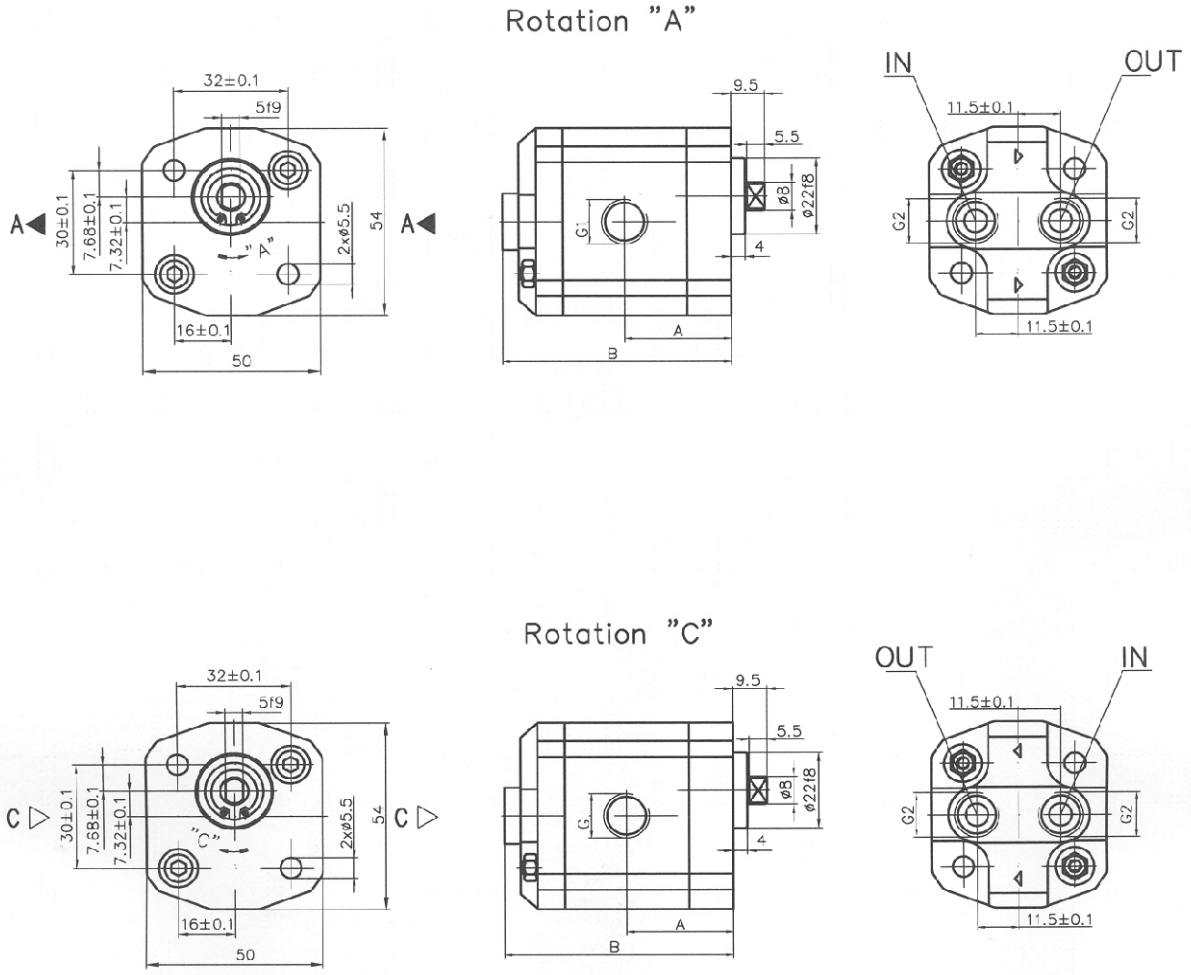

Type	Displacement	Flow		Pressure	max Speed	Dimension							
		at 1500 rpm	at max rpm	P_{nom}	n	A	B	C	Inlet			Outlet	
	cm^3/rev	l/min	l/min	bar	rpm	mm	mm		G1	G1		G2	G2
00A(C)0,25X048W2	0,25	0,3	0,8	200	3500	27,6	55,3	60,8					
00A(C)0,3X048W2	0,3	0,4	0,9	200	3500	27,7	55,7	61,2					
00A(C)0,5X048W2	0,5	0,7	1,6	200	3500	28,7	57,5	63,0					
00A(C)0,75X048W2	0,75	1,0	2,3	200	3500	29,9	59,8	65,3					
00A(C)1X048W2	1	1,4	3,2	200	3500	31,0	62,0	67,5	1/4"	1/4"		1/4"	1/4"
00A(C)1,25X048W2	1,25	1,7	3,4	200	3000	32,1	64,2	69,7					
00A(C)1,5X048W2	1,5	2,1	3,5	175	2500	33,2	66,5	72,0					
00A(C)1,75X048W2	1,75	2,4	4,1	160	2500	34,3	68,7	74,2					
00A(C)2X048W2	2	2,8	3,7	160	2000	35,5	70,9	76,4					

Used symbols:

q - displacement
p_{nom} - nominal pressure
n_{min} - minimal speed
n_{nom} - nominal speed
n_{max} - maximal speed
P_{nom} - power at p_{nom} and n_{nom}
P_{max} - power at p_{nom} and n_{max}

volumetric efficiencies:

η_{qmin} - at min. speed
η_{qnom} - at nom. speed
η_{qmax} - at max. speed

efficiencies:

η_{min} - at min. speed
η_{nom} - at nom. speed
η_{max} - at max. speed

q	cm^3	1	1.25	1.6	2	2.5	3.15	3.65	4.2	5	5.7	6.1	7.4	8.5	9.8
p_{nom}	bar	250	250	250	250	250	250	250	250	250	200	200	180	150	120
n_{min}	min^{-1}	750	750	750	750	750	750	750	750	750	750	750	750	750	750
n_{nom}	min^{-1}	1500	1500	1500	1500	1500	1500	1500	1500	1500	1500	1500	1500	1500	1500
n_{max}	min^{-1}	3500	3500	3500	3500	3500	3500	3500	3000	2500	2000	2000	2000	2000	2000
η_{qmin}	%	78	78	78	78	79	79	79	79	79	80	80	81	81	82
η_{min}	%	70	70	70	70	71	71	71	71	71	72	72	73	73	74
η_{qnom}	%	91	91	91	92	92	92	92	92	92	93	93	94	94	95
η_{nom}	%	83	83	83	84	84	84	84	84	84	85	85	86	86	87
η_{qmax}	%	93	93	93	94	94	94	94	94	94	95	95	95	96	96
η_{max}	%	84	84	84	85	85	85	85	85	85	86	86	86	87	88
P_{nom}	kW	0.63	0.78	1	1.25	1.56	2	2.45	2.82	3.36	3.06	3.27	3.57	3.41	3.15
P_{max}	kW	1.46	1.82	2.71	2.92	3.65	4.6	5.71	5.63	4.47	4.07	4.35	4.75	4.55	4.2

10 A/C ...X001

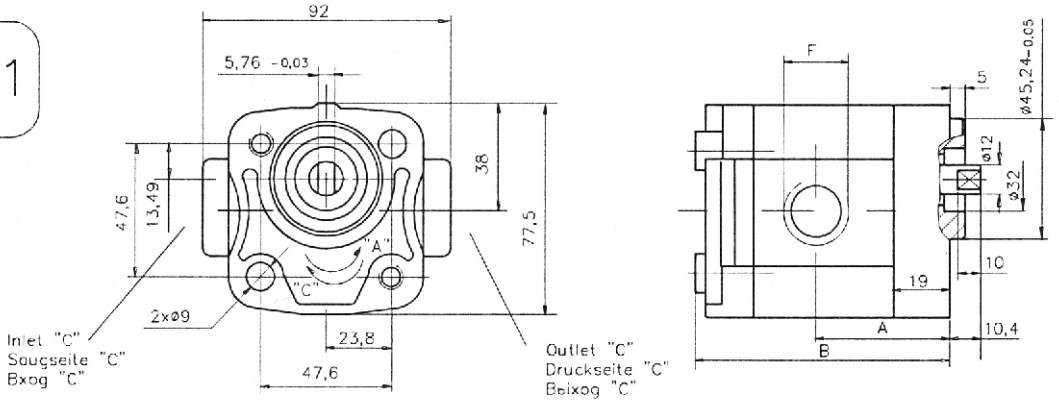

Type / Typ / Тип	Displacement / Foerdervolumen / Рабочий объем	Dimensions Abmessungen Размеры											
		A	B	Inlet Saugseite Вход					Outlet Druckseite Выход				
				E	d	F	M	G	E	d	F	M	G
	cm³	mm		mm					mm				
10A(C)1X001	1	40,1	76,2			1/2" NPTF - 14					1/2" NPTF - 14		
10A(C)1,25X001	1,25	40,6	77,2										
10A(C)1,6X001	1,6	41,3	78,6										
10A(C)2X001	2	42,1	80,2										
10A(C)2,5X001	2,5	43,1	82,2										
10A(C)3,15X001	3,15	44,5	85										
10A(C)3,65X001	3,65	45,4	87,55										
10A(C)4,2X001	4,2	46,15	88,3										
10A(C)5X001	5	48,1	92,9										
10A(C)5,7X001	5,7	49,5	95,8										
10A(C)6,1X001	6,1	50,30	98,8										

10 A/C ...X115

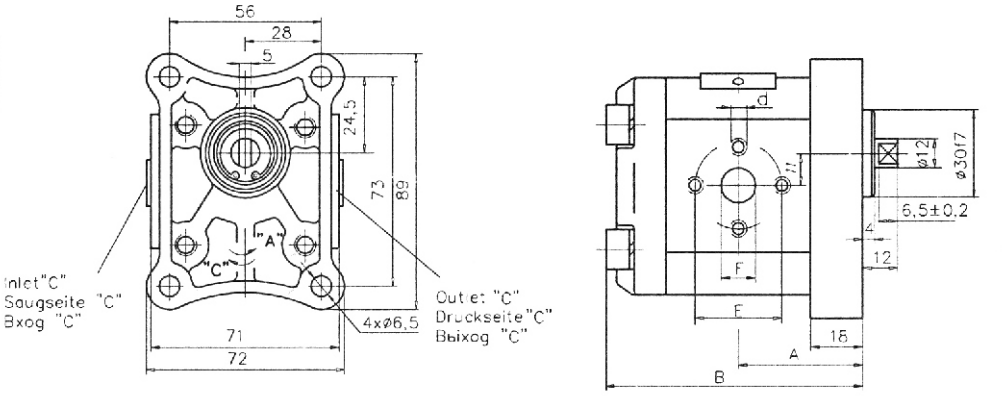

Type / Typ / Тип	Displacement / Foerdervolumen / Рабочий объем	Dimensions Abmessungen Размеры											
		A	B	Inlet Saugseite Вход					Outlet Druckseite Выход				
				E	d	F	M	G	E	d	F	M	G
	cm³	mm		mm					mm				
10A(C)1X115	1	39,1	81,0	30	M6	12	M16x1,5	3/8"	30	M6	12	M16x1,5	3/8"
10A(C)1,2X115	1,25	39,5	82,0	30	M6	12	M16x1,5	3/8"	30	M6	12	M16x1,5	3/8"
10A(C)1,6X115	1,6	40,3	83,6	30	M6	12	M16x1,5	3/8"	30	M6	12	M16x1,5	3/8"
10A(C)2X115	2	41,1	85,2	30	M6	12	M16x1,5	3/8"	30	M6	12	M16x1,5	3/8"
10A(C)2,5X115	2,5	42,1	87,2	30	M6	12	M16x1,5	3/8"	30	M6	12	M16x1,5	3/8"
10A(C)3,15X115	3,15	43,5	89,8	30	M6	12	M20x1,5	1/2"	30	M6	12	M16x1,5	3/8"
10A(C)3,65X115	3,65	44,6	91,85	30	M6	12	M20x1,5	1/2"	30	M6	12	M16x1,5	3/8"
10A(C)4,2X115	4,2	45,5	94,1	30	M6	12	M20x1,5	1/2"	30	M6	12	M16x1,5	3/8"
10A(C)5X115	5	47,1	97,2	30	M6	12	M20x1,5	1/2"	30	M6	12	M16x1,5	3/8"
10A(C)5,7X115	5,7	48,5	100,1	30	M6	12	M20x1,5	1/2"	30	M6	12	M16x1,5	3/8"
10A(C)6,1X115	6,1	49,4	101,8	30	M6	12	M20x1,5	1/2"	30	M6	12	M16x1,5	3/8"

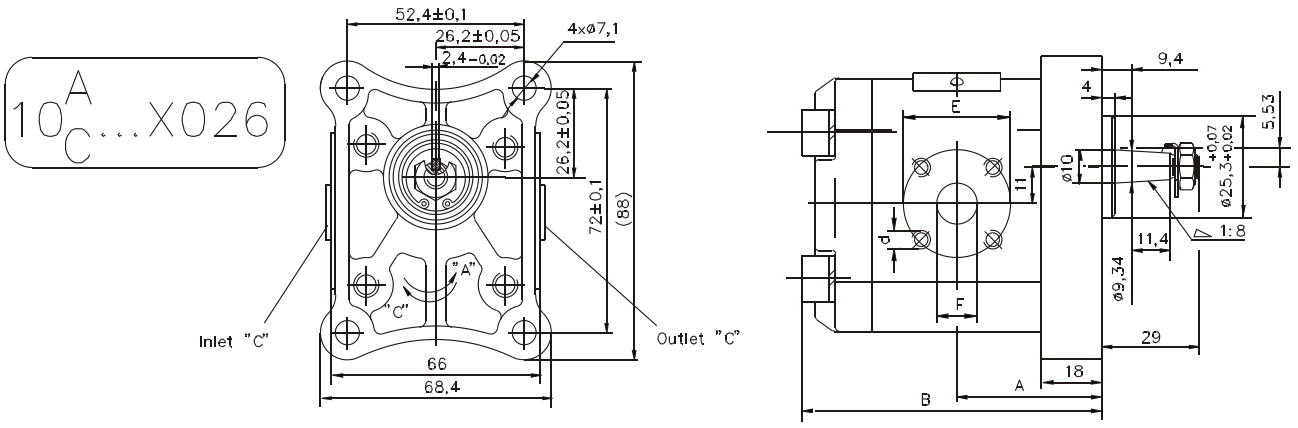

Type	Displacement	Dimensions											
		A	B	Inlet					Outlet				
				E	d	F	M	G	E	d	F	M	G
	cm³	mm		mm					mm				
10A(C)1X026	1	39,1	81,0	30	M6	12	M16x1,5	3/8"	30	M6	12	M16x1,5	3/8"
10A(C)1,25X026	1,25	39,5	82,0	30	M6	12	M16x1,5	3/8"	30	M6	12	M16x1,5	3/8"
10A(C)1,60X026	1,6	40,3	83,6	30	M6	12	M16x1,5	3/8"	30	M6	12	M16x1,5	3/8"
10A(C)2X026	2	41,1	85,2	30	M6	12	M16x1,5	3/8"	30	M6	12	M16x1,5	3/8"
10A(C)2,50X026	2,5	42,1	87,2	30	M6	12	M16x1,5	3/8"	30	M6	12	M16x1,5	3/8"
10A(C)3,15X026	3,15	43,5	89,8	30	M6	12	M20x1,5	1/2"	30	M6	12	M16x1,5	3/8"
10A(C)3,65X026	3,65	44,4	91,9	30	M6	12	M20x1,5	1/2"	30	M6	12	M16x1,5	3/8"
10A(C)4,20X026	4,2	45,5	94,1	30	M6	12	M20x1,5	1/2"	30	M6	12	M16x1,5	3/8"
10A(C)5X026	5	47,1	97,2	30	M6	12	M20x1,5	1/2"	30	M6	12	M16x1,5	3/8"
10A(C)5,70X026	5,7	48,5	100,1	30	M6	12	M20x1,5	1/2"	30	M6	12	M16x1,5	3/8"
10A(C)6,10X026	6,1	49,4	101,8	30	M6	12	M20x1,5	1/2"	30	M6	12	M16x1,5	3/8"
10A(C)7,4X026	7,4	53.1	107,3	30	M6	12	M20x1,5	1/2"	30	M6	12	M16x1,5	3/8"
10A(C)8,5X026	8,5	54.4	110.8	30	M6	12	M20x1,5	1/2"	30	M6	12	M16x1,5	3/8"
10A(C)9,8X026	9,8	57	117,1	30	M6	12	M20x1,5	1/2"	30	M6	12	M16x1,5	3/8"

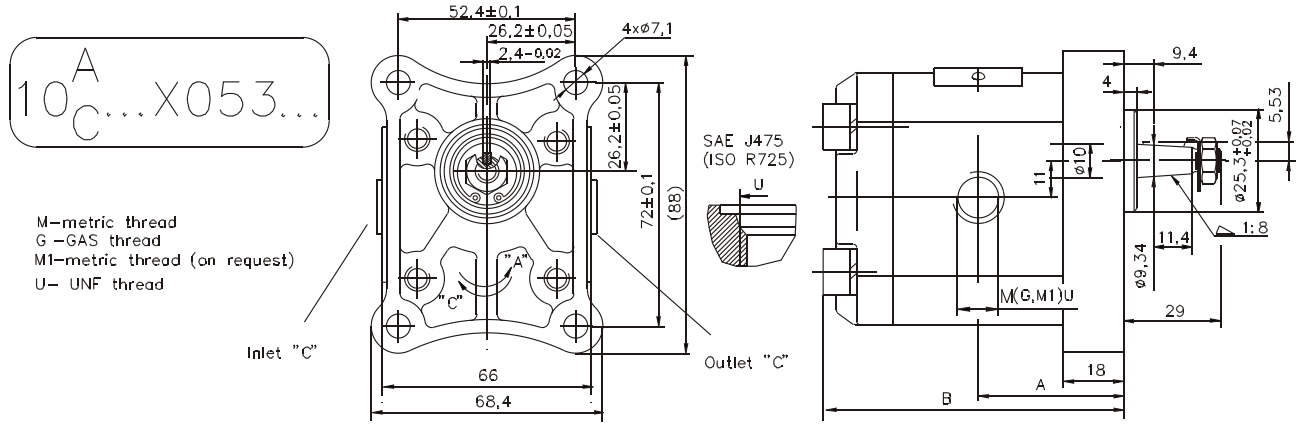

Type	Displacement	Dimensions											
		A	B	Inlet					Outlet				
				U	d	M1	M	G	U	d	M1	M	G
	cm³	mm		mm					mm				
10A(C)1X053...	1	39,1	81,0	3/4" - 16 UNF 2B			M16x1,5	3/8"	9/16" - 18 UNF 2B			M16x1,5	3/8"
10A(C)1,25X053...	1,25	39,5	82,0				M16x1,5	3/8"				M16x1,5	3/8"
10A(C)1,6X053...	1,6	40,3	83,6				M16x1,5	3/8"				M16x1,5	3/8"
10A(C)2X053...	2	41,1	85,2				M16x1,5	3/8"				M16x1,5	3/8"
10A(C)2,5X053...	2,5	42,1	87,2				M16x1,5	3/8"				M16x1,5	3/8"
10A(X)3,15X053...	3,15	43,5	89,8				M20x1,5	1/2"				M16x1,5	3/8"
10A(C)3,65X053...	3,65	44,4	91,9				M20x1,5	1/2"				M16x1,5	3/8"
10A(C)4,2X053...	4,2	45,5	94,1				M20x1,5	1/2"				M16x1,5	3/8"
10A(C)5X053...	5	47,1	97,2				M20x1,5	1/2"				M16x1,5	3/8"
10A(C)5,7X053...	5,7	48,5	100,1				M20x1,5	1/2"				M16x1,5	3/8"
10A(C)6,1X053...	6,1	49,4	101,8			M22x1,5	M20x1,5	1/2"			M18x1,5	M16x1,5	3/8"

10A...X027

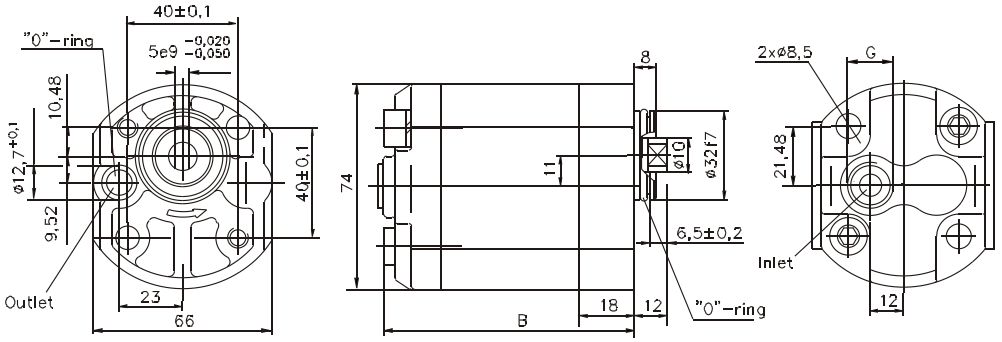

Type	Displacement	Dimensions											
		A	B	Inlet					Outlet				
				E	d	F	M	G	E	d	F	M	G
	cm³	mm		mm					mm				
10A1X027	1		81,0					G3/8					
10A1,25X027	1,25		82,0					G3/8					
10A1,6X027	1,60		83,6					G3/8					
10A2X027	2		85,2					G3/8					
10A2,5X027	2,5		87,2					G3/8					
10A3,15X027	3,15		89,8					G3/8					
10A3,65X027	3,65		91,9					G3/8					
10A4,2X027	4,2		94,1					G3/8					
10A5X027	5		97,1					G3/8					
10A5,7X027	5,7		100,1					G3/8					
10A6,1X027	6,1		101,7					G3/8					

10C...X027

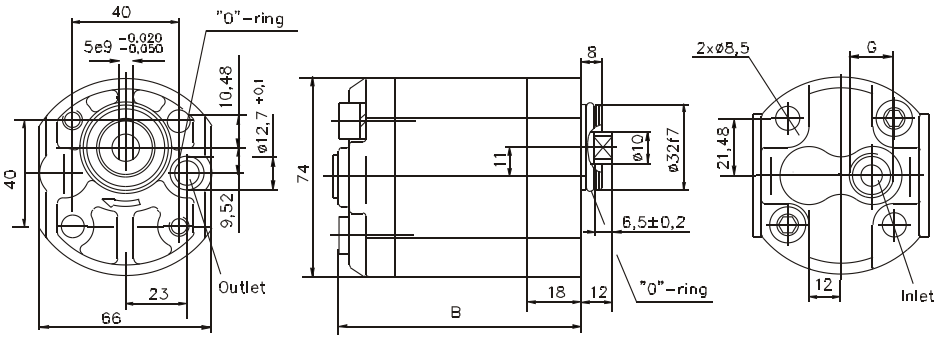

Type	Displacement	Dimensions											
		A	B	Inlet					Outlet				
				E	d	F1	M	G	E	d	F1	M	G
	cm³	mm		mm					mm				
10C1X027	1		81,0					G3/8					
10C1,25X027	1,25		82,0					G3/8					
10C1,6X027	1,6		83,6					G3/8					
10C2X027	2		85,2					G3/8					
10C2,50X027	2,50		87,2					G3/8					
10C3,15X027	3,15		89,8					G3/8					
10C3,65X027	3,65		91,9					G3/8					
10C4,2X027	4,2		94,1					G3/8					
10C5X027	5		97,1					G3/8					
10C5,7X027	5,7		100,0					G3/8					
10C6,1X027	6,1		101,7					G3/8					

Rotation "A" - (anticlockwise)

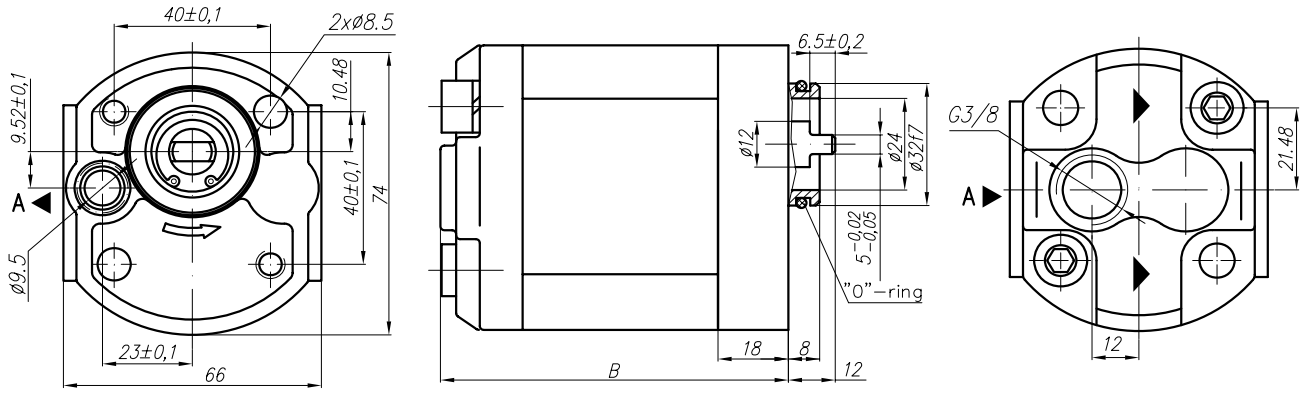

Rotation "C" - (cbckwise)

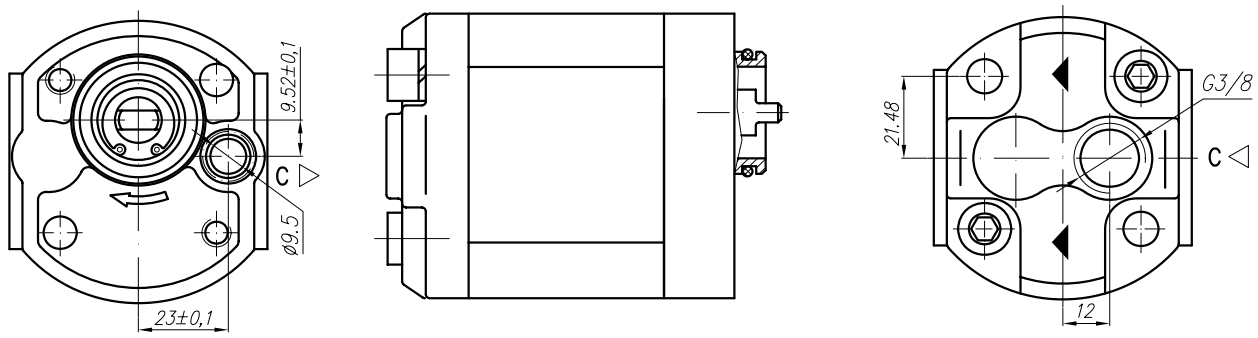

Type	Displacement	Flow		Pressure	max Speed	Dimension							
		at 1500 rpm	at max rpm	P_{nom}	n	A	B	Inlet			Outlet		
	cm^3/rev	l/min	l/min	bar	rpm	mm	mm	M	G	U			
10A(C)1X302	1	1,40	3,26	250	3500	71	81						
10A(C)1,25X302	1,25	1,74	4,07	250	3500	72	82						
10A(C)1,6X302	1,6	2,23	5,21	250	3500	73,6	83,6						
10A(C)2X302	2	2,82	6,58	250	3500	75,2	85,2						
10A(C)2,5X302	2,5	3,53	8,23	250	3500	77,2	87,2						
** 10A(C)2,65X302*	*2,65*	*3,74*	*8,72*	*250*	*3500*	*77,8*	*87,8*						
10A(C)3,15X302	3,15	4,44	10,36	250	3500	79,8	89,8						
10A(C)3,65X302	3,65	5,15	12,01	250	3500	81,9	91,9						
10A(C)4,2X302	4,2	5,92	13,82	250	3500	84,1	94,1					ø9,2	
** 10A(C)4,7X302*	*4,7*	*6,63*	*15,46*	*250*	*3500*	*87,1*	*97,1*		G 3	↕	A		
10A(C)5X302	5	7,05	14,10	250	3000	87,2	97,2						
10A(C)5,7X302	5,7	8,12	16,25	200	3000	90,1	100,1						
10A(C)6,1X302	6,1	8,69	14,49	180	2500	91,8	101,8						
10A(C)7,4X302	7,4	10,55	17,58	180	2500	97,2	107,2						
** 10A(C)8X302*	*8*	*11,40*	*15,20*	*150*	*2000*	*99,7*	*109,7*						
10A(C)8,5X302	8,5	12,11	16,15	150	2000	101,7	111,7						
10A(C)9,8X302	9,8	13,97	18,62	120	2000	107	117						

Rotation "A" - (anticlockwise)

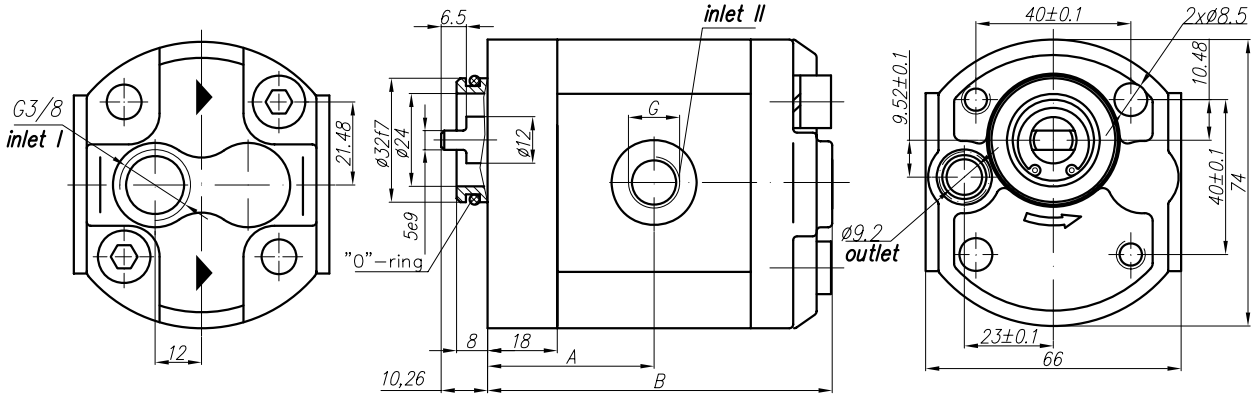

Rotation "C " - (dockwise)

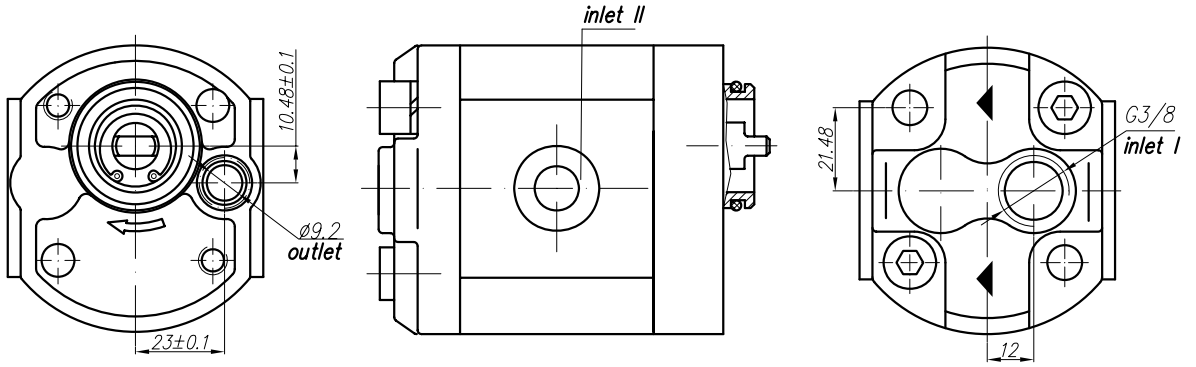

Type	Displacement	Flow		Pressure	max Speed	Dimension							
		at 1500 rpm	at max rpm	P_{nom}	n	A	B	Inlet			Outlet		
	cm^3/rev	l/min	l/min	bar	rpm	mm	mm		I	II			
10A(C)1X348	1	1,40	3,26	250	3500	39,1	81						
10A(C)1,25X348	1,25	1,74	4,07	250	3500	39,5	82						
10A(C)1,6X348	1,6	2,23	5,21	250	3500	40,3	83,6						
10A(C)2X348	2	2,82	6,58	250	3500	41,1	85,2						
10A(C)2,5X348	2,5	3,53	8,23	250	3500	42,1	87,2						
* *10A(C)2,65X348*	*2,65*	*3,74*	*8,72*	*250*	*3500*	*42,4*	*87,8*						
10A(C)3,15X348	3,15	4,44	10,36	250	3500	43,5	89,8						
10A(C)3,65X348	3,65	5,15	12,01	250	3500	44,4	91,9						
10A(C)4,2X348	4,2	5,92	13,82	250	3500	45,5	94,1						
* *10A(C)4,7X348*	*4,7*	*6,63*	*15,46*	*250*	*3500*	*46,1*	*97,1*		G 3/8" - A	G 1/4" - A		ø9,2	
10A(C)5X348	5	7,05	14,10	250	3000	47,1	97,2						
10A(C)5,7X348	5,7	8,12	16,25	200	3000	48,5	100,1						
10A(C)6,1X348	6,1	8,69	14,49	180	2500	49,4	101,8						
10A(C)7,4X348	7,4	10,55	17,58	180	2500	52,1	107,2						
* *10A(C)8X348*	*8*	*11,40*	*15,20*	*150*	*2000*	*53,4*	*109,7*						
10A(C)8,5X348	8,5	12,11	16,15	150	2000	54,4	111,7			G 3/8 - A			
10A(C)9,8X348	9,8	13,97	18,62	120	2000	57	117						

10R...X003

Pmax=200bar

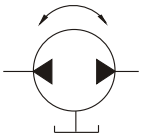

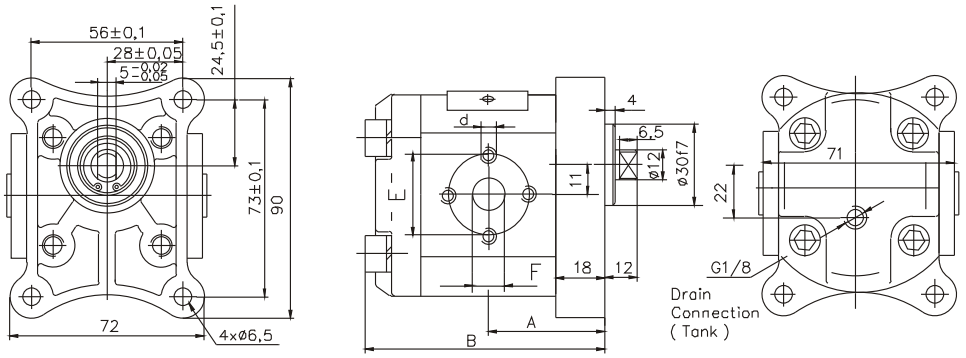

Type	Displacement	Dimensions											
		A	B	Inlet					Outlet				
				E	d	F	M	G	E	d	F	M	G
	cm3	mm		mm					mm				
10XR1X003	1	39,1	81,0	30	M6	12			30	M6	12		
10R1,25X003	1,25	39,5	82,0	30	M6	12			30	M6	12		
10R1,6X003	1,6	40,3	83,6	30	M6	12			30	M6	12		
10R2X003	2	41,1	85,2	30	M6	12			30	M6	12		
10R2,5X003	2,5	42,1	87,2	30	M6	12			30	M6	12		
10R3,15X003	3,15	43,5	89,8	30	M6	12			30	M6	12		
10R3,65X003	3,65	44,4	91,9	30	M6	12			30	M6	12		
10R4,2X003	4,2	45,5	94,1	30	M6	12			30	M6	12		
10R5X003	5	47,1	97,2	30	M6	12			30	M6	12		
10R5,7X003	5,7	48,5	100,1	30	M6	12			30	M6	12		
10R6,1X003	6,1	49,4	101,8	30	M6	12			30	M6	12		

10MR...X563... (M,G,U)

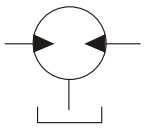

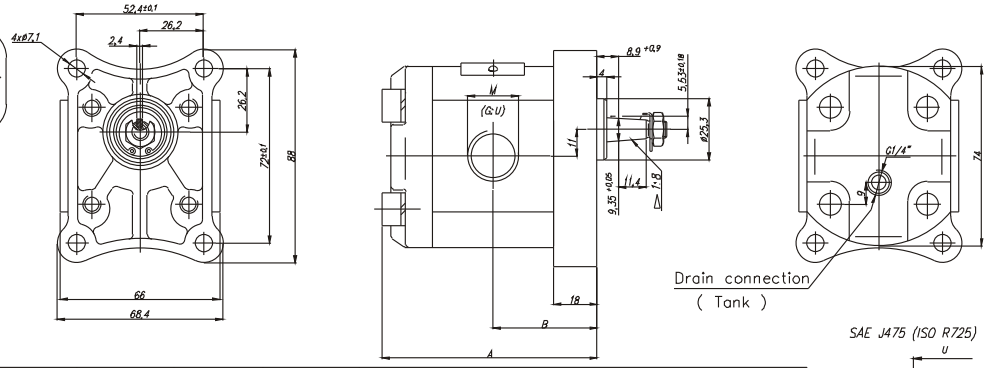

SAE J475 (ISO R725)

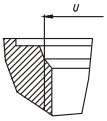

Type	Displacement	Pressure	Frequency	Dimensions							
				A	B	Inlet			Outlet		
						M	G	U	M	G	U
	q , [см³]	Pnom. [MPa]	n , [мин⁻¹]	mm	mm	mm			mm		
10MR1,6X563...	1,6	25	750...3500	40,3	83,6	M16x1,5	G3/8"	3/4-16 UNF-2B	M16x1,5	G3/8"	3/4-16 UNF-2B
10MR2X563...	2			41,1	85,2						
10MR2,5X563...	2,5			42,1	87,2						
10MR2,65X563...	2,65			42,4	87,7						
10MR3,15X563...	3,15			43,5	89,8						
10MR3,65X563...	3,65			44,4	91,9	M20x1,5	G1/2"		M20x1,5	G1/2"	
10MR4,2X563...	4,2			45,5	94,1						
10MR4,7X563...	4,7			46,1	96						
10MR5X563...	5			47,1	97,2						
10MR5,7X563...	5,7	20	750...3000	48,5	100,1						
10MR6,1X563...	6,1			49,4	101,8						
10MR7,4X563...	7,4	18	750...2500	52,1	107,2						
10MR8X563...	8	15		53,4	109,7						
10MR8,5X563...	8,5			54,4	111,7						
10MR9,8X563...	9,8	12		57	117						

Used symbols:

q - displacement
p_{nom} - nominal pressure
n_{min} - minimal speed
n_{nom} - nominal speed
n_{max} - maximal speed
P_{nom} - power at p_{nom} and n_{nom}
P_{max} - power at p_{nom} and n_{max}

volumetric efficiencies:

η_{qmin} - at min. speed
η_{qnom} - at nom. speed
η_{qmax} - at max. speed

efficiencies:

η_{min} - at min. speed
η_{nom} - at nom. speed
η_{max} - at max. speed

q	cm^3	4.5	6.3	8.2	10	11	12	14	15	16	19	22	25
p_{nom}	bar	250	250	250	250	250	250	250	250	250	200	200	160
n_{min}	min^{-1}	650	650	650	650	650	650	650	650	650	650	650	650
n_{nom}	min^{-1}	1500	1500	1500	1500	1500	1500	1500	1500	1500	1500	1500	1500
n_{max}	min^{-1}	3500	3500	3500	3500	3500	3500	3500	2500	2500	2500	2000	2000
η_{qmin}	%	75	76	77	77	78	78	78	80	80	82	82	82
η_{min}	%	67	68	69	70	71	71	71	74	74	74	74	74
η_{qnom}	%	90	91	91	92	92.5	92.5	92.5	93.5	93.5	94	94	94
η_{nom}	%	80	82	83	83.5	84	84	84	85	85	85	85	85
η_{qmax}	%	91	92	92	93	93	94	95	96	96	96	96	96
η_{max}	%	81	83	84	84	85	85	85	86	86	86	86	86
P_{nom}	kW	3.1	4.1	5.6	6.8	7.4	8.3	9.7	10.1	11	10.2	12	11
P_{max}	kW	7	9.5	13	15.8	17.4	19	19.2	17	18.5	17	18	18.5

20 A/C ...X006

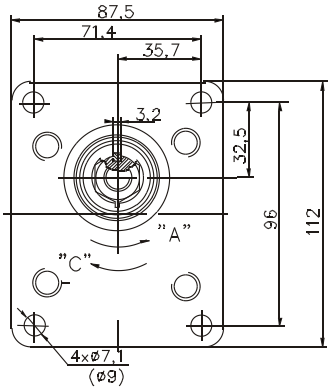

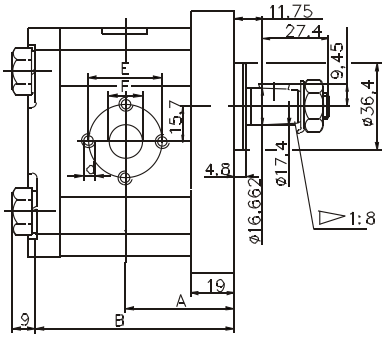

Type	Displacement	Dimensions											
		A	B	Inlet					Outlet				
				E	d	F			E	d	F		
	cm³	mm		mm					mm				
20A(C)4,5X006	4,5	42,5	80	30	M6	13			30	M6	13		
20A(C)6,3X006	6,3	42,5	80	30	M6	13			30	M6	13		
20A(C)8,2X006	8,2	42,5	80	30	M6	13			30	M6	13		
20A(C)10X006	10	47	89	40	M8	19			30	M6	14		
20A(C)11X006	11,3	48	91,1	40	M8	19			30	M6	14		
20A(C)12X006	12	48,7	92,3	40	M8	19			30	M6	14		
20A(C)14X006	14	50,2	95,4	40	M8	19			30	M6	14		
20A(C)15X006	15	51	96,9	40	M8	19			30	M6	14		
20A(C)16X006	16	51,8	98,6	40	M8	19			30	M6	14		
20A(C)19X006	19	54,3	103,5	40	M8	19			30	M6	14		
20A(C)22X006	22	56,8	108,5	40	M8	19			30	M6	14		
20A(C)25X006	25	59,2	113,4	40	M8	19			40	M8	19		
20A(C)14X006A	14	55,5	95,4	40	M8	19			30	M6	14		
20A(C)15X006A	15	55,5	96,9	40	M8	19			30	M6	14		
20A(C)19X006A	19	59	103,5	40	M8	19			30	M6	14		

20 A/C ...X080

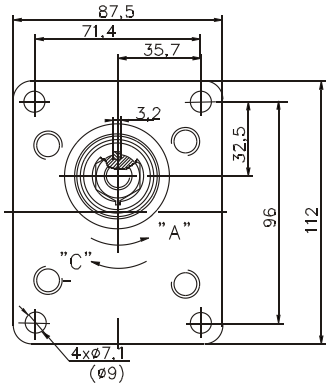

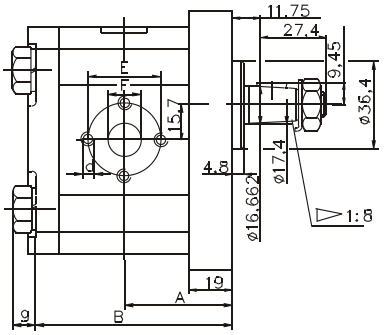

Type	Displacement	Dimensions											
		A	B	Inlet					Outlet				
				E	d	F			E	d	F		
	cm³	mm			mm					mm			
20A(C)4,5X080	4,5	42,5	80	30	1/4-20UNC	13			30	1/4-20UNC	13		
20A(C)6,3X080	6,3	42,5	80	30		13			30		13		
20A(C)8,2X080	8,2	42,5	80	30		13			30		13		
20A(C)10X080	10	47	89	40		19			30		14		
20A(C)11X080	11,3	48	91,1	40	5/16-18UNC	19			30		14		
20A(C)12X080	12	48,7	92,3	40		19			30		14		
20A(C)14X080	14	50,2	95,4	40		19			30		14		
20A(C)15X080	15	51	96,9	40		19			30		14		
20A(C)16X080	16	51,8	98,6	40		19			30		14		
20A(C)19X080	19	54,3	103,5	40		19			30		14		
20A(C)22X080	22	56,8	108,5	40		19			30		14		
20A(C)25X080	25	59,2	113,4	40		19			40	5/16-18UNC	19		

20 A/C ...X007

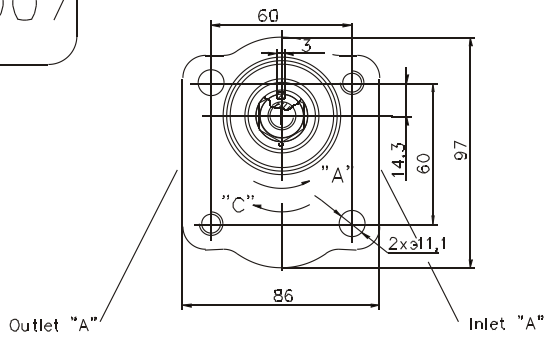

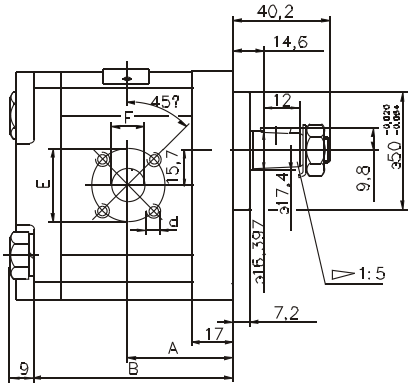

Type	Displacement	Dimensions											
		A	B	Inlet					Outlet				
				E	d	F	M	G	E	d	F	M	G
	cm^3	mm		mm				"	mm				"
20A(C)4,5X007	4,5	37,3	75,1	40	M6	15	M20x1,5	G1/2	35	M6	15	M16x1,5	G1/2
20A(C)6,3X007	6,3	38,6	78	40	M6	15	M20x1,5	G1/2	35	M6	15	M16x1,5	G1/2
20A(C)8,2X007	8,2	40,6	78	40	M6	20	M20x1,5	G1/2	35	M6	15	M16x1,5	G1/2
20A(C)10X007	10	45	87	40	M6	20	M20x1,5	G3/4	35	M6	15	M16x1,5	G1/2
20A(C)11X007	11,3	45	89	40	M6	20	M20x1,5	G3/4	35	M6	15	M16x1,5	G1/2
20A(C)12X007	12	45	90.3	40	M6	20	M20x1,5	G3/4	35	M6	15	M16x1,5	G1/2
20A(C)14X007	14	45	93,4	40	M6	20	M20x1,5	G3/4	35	M6	15	M16x1,5	G1/2
20A(C)15X007	15	45	94,9	40	M6	20	M20x1,5	G3/4	35	M6	15	M16x1,5	G1/2
20A(C)16X007	16	45	96,5	40	M6	20	M20x1,5	G3/4	35	M6	15	M16x1,5	G1/2
20A(C)19X007	19	45	101,5	40	M6	20	M20x1,5	G3/4	35	M6	15	M20x1,5	G1/2
20A(C)22X007	22	52,5	106,5	40	M6	20	M20x1,5	G3/4	35	M6	15	M20x1,5	G1/2
20A(C)25X007	25	57,2	111,4	40	M6	20	M20x1,5	G3/4	35	M6	15	M20x1,5	G1/2

20 A/C ...X008

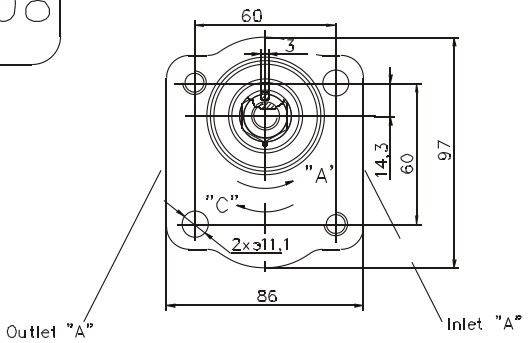

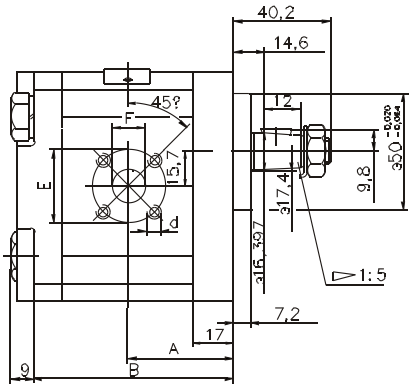

Type	Displacement	Dimensions											
		A	B	Inlet					Outlet				
				E	d	F	M	G	E	d	F	M	G
	cm^3	mm		mm				"	mm				"
20A(C)4,5X008	4,5	37,3	75,1	40	M6	15	M20x1,5	G1/2	35	M6	15	M16x1,5	G1/2
20A(C)6,3X008	6,3	38,6	78	40	M6	15	M20x1,5	G1/2	35	M6	15	M16x1,5	G1/2
20A(C)8,2X008	8,2	40,6	78	40	M6	20	M20x1,5	G1/2	35	M6	15	M16x1,5	G1/2
20A(C)10X008	10	45	87	40	M6	20	M20x1,5	G3/4	35	M6	15	M16x1,5	G1/2
20A(C)11X008	11,3	45	89	40	M6	20	M20x1,5	G3/4	35	M6	15	M16x1,5	G1/2
20A(C)12X008	12	45	90.3	40	M6	20	M20x1,5	G3/4	35	M6	15	M16x1,5	G1/2
20A(C)14X008	14	45	93,4	40	M6	20	M20x1,5	G3/4	35	M6	15	M16x1,5	G1/2
20A(C)15X008	15	45	94,9	40	M6	20	M20x1,5	G3/4	35	M6	15	M16x1,5	G1/2
20A(C)16X008	16	45	96,5	40	M6	20	M20x1,5	G3/4	35	M6	15	M16x1,5	G1/2
20A(C)19X008	19	45	101,5	40	M6	20	M20x1,5	G3/4	35	M6	15	M20x1,5	G1/2
20A(C)22X008	22	52,5	106,5	40	M6	20	M20x1,5	G3/4	35	M6	15	M20x1,5	G1/2
20A(C)25X008	25	57,2	111,4	40	M6	20	M20x1,5	G3/4	35	M6	15	M20x1,5	G1/2

20 A/C ...X155

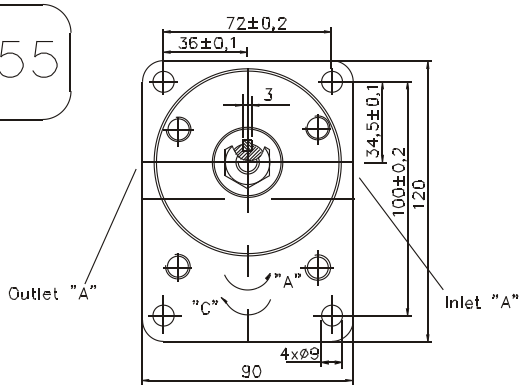

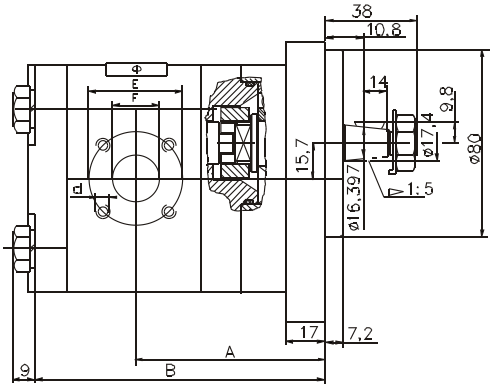

Type	Displacement	Dimensions											
		A	B	Inlet					Outlet				
				E	d	F	M	G	E	d	F	M	G
	cm³	mm		mm					mm				
20A(C)4,5X155	4,5	71,3	112	40	M6	15			35	M6	15		
20A(C)6,3X155	6,3	72,6	115	40	M6	15			35	M6	15		
20A(C)8,2X155	8,2	74,6	117,9	40	M6	20			35	M6	15		
20A(C)10X155	10	79	121	40	M6	20			35	M6	15		
20A(C)11X155	11,3	79	123	40	M6	20			35	M6	15		
20A(C)12X155	12	79	124,3	40	M6	20			35	M6	15		
20A(C)14X155	14	79	127,4	40	M6	20			35	M6	15		
20A(C)15X155	15	79	128,9	40	M6	20			35	M6	15		
20A(C)16X155	16	79	130,5	40	M6	20			35	M6	15		
20A(C)19X155	19	79	135,5	40	M6	20			35	M6	15		
20A(C)22X155	22	86,5	140,9	40	M6	20			35	M6	15		
20A(C)25X155	25	91,2	145,4	40	M6	20			35	M6	15		

20 A/C ...X329

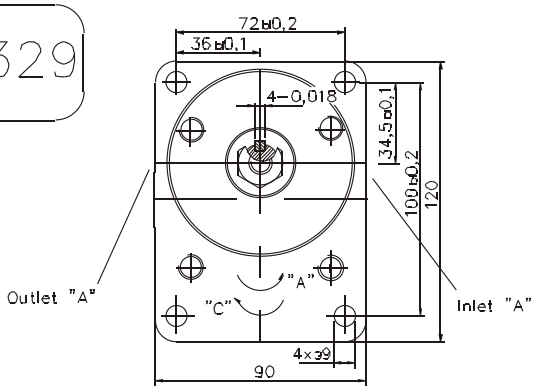

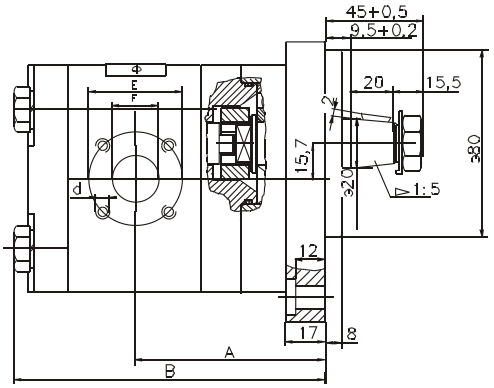

Type	Displacement	Dimensions											
		A	B	Inlet					Outlet				
				E	d	F	M	G	E	d	F	M	G
	cm³	mm		mm					mm				
20A(C)4,5X329	4,5	71,3	121	40	M6	15			35	M6	15		
20A(C)6,3X329	6,3	72,6	124	40	M6	15			35	M6	15		
20A(C)8,2X329	8,2	74,6	126,9	40	M6	20			35	M6	15		
20A(C)10X329	10	79	130	40	M6	20			35	M6	15		
20A(C)11X329	11,3	79	132,1	40	M6	20			35	M6	15		
20A(C)12X329	12	79	133,3	40	M6	20			35	M6	15		
20A(C)14X329	14	79	136,4	40	M6	20			35	M6	15		
20A(C)15X329	15	79	138	40	M6	20			35	M6	15		
20A(C)16X329	16	79	139,6	40	M6	20			35	M6	15		
20A(C)19X329	19	79	144,5	40	M6	20			35	M6	15		
20A(C)22X329	22	86,5	149,5	40	M6	20			35	M6	15		
20A(C)25X329	25	90,9	154,4	40	M6	20			35	M6	15		

20 A/C ...X086

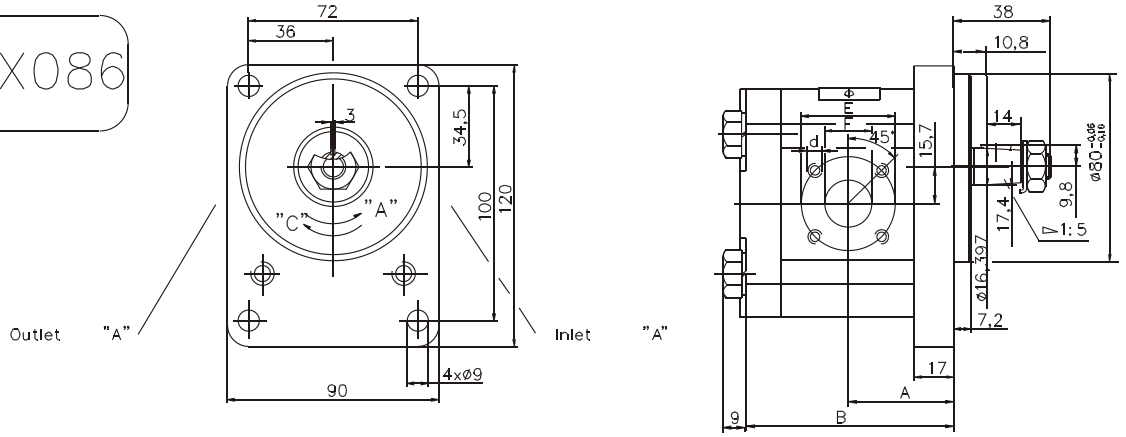

Type	Displacement	Dimensions											
		A	B	Inlet					Outlet				
				E	d	F	M	G	E	d	F	M	G
	cm 3	mm		mm				"	mm				"
20A(C)4,5X086	4,5	39,8	78	40	M6	15			35	M6	15		
20A(C)6,3X086	6,3	41	81	40	M6	15			35	M6	15		
20A(C)8,2X086	8,2	43,1	83,9	40	M6	20			35	M6	15		
20A(C)10X086	10	47,5	87	40	M6	20			35	M6	15		
20A(C)11X086	11,3	47,5	89	40	M6	20			35	M6	15		
20A(C)12X086	12	47,5	90,3	40	M6	20			35	M6	15		
20A(C)14X086	14	47,5	93,4	40	M6	20			35	M6	15		
20A(C)15X086	15	47,5	94,9	40	M6	20			35	M6	15		
20A(C)16X086	16	47,5	96,5	40	M6	20			35	M6	15		
20A(C)19X086	19	47,5	101,5	40	M6	20			35	M6	15		
20A(C)22X086	22	55	106,5	40	M6	20			35	M6	15		
20A(C)25X086	25	57,2	111,4	40	M6	20			35	M6	15		

20 A/C ...X021

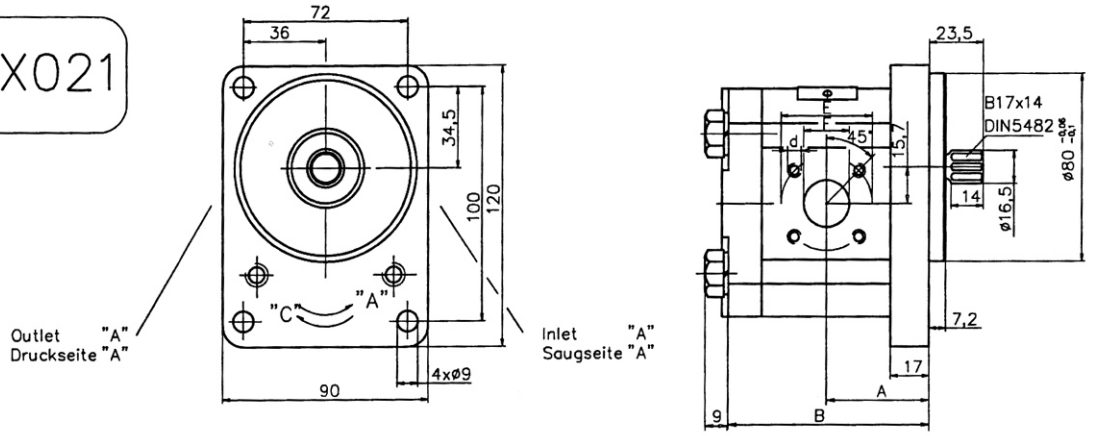

Type Typ	Displacement Foerdervolumen	Dimensions Abmessungen											
		A	B	Inlet Saugseite					Outlet Druckseite				
				E	d	F1	M	G	E	d	F1	M	G
	cm 3	mm		mm				"	mm				"
20A(C)4,5X021	4,5	39,8	78	40	M6	15	M20x1,5	G1/2	35	M6	15	M16x1,5	G1/2
20A(C)6,3X021	6,3	41	81	40	M6	15	M20x1,5	G1/2	35	M6	15	M16x1,5	G1/2
20A(C)8,2X021	8,2	43,1	83,9	40	M6	20	M20x1,5	G1/2	35	M6	15	M16x1,5	G1/2
20A(C)10X021	10	47,5	87	40	M6	20	M20x1,5	G3/4	35	M6	15	M16x1,5	G1/2
20A(C)11X021	11,3	47,5	89	40	M6	20	M20x1,5	G3/4	35	M6	15	M16x1,5	G1/2
20A(C)12X021	12	47,5	90,3	40	M6	20	M20x1,5	G3/4	35	M6	15	M16x1,5	G1/2
20A(C)14X021	14	47,5	93,4	40	M6	20	M20x1,5	G3/4	35	M6	15	M16x1,5	G1/2
20A(C)15X021	15	47,5	94,9	40	M6	20	M20x1,5	G3/4	35	M6	15	M16x1,5	G1/2
20A(C)16X021	16	47,5	96,5	40	M6	20	M20x1,5	G3/4	35	M6	15	M16x1,5	G1/2
20A(C)19X021	19	47,5	101,5	40	M6	20	M20x1,5	G3/4	35	M6	15	M20x1,5	G1/2
20A(C)22X021	22	55	106,5	40	M6	20	M20x1,5	G3/4	35	M6	15	M20x1,5	G1/2
20A(C)25X021	25	57,2	111,4	40	M6	20	M20x1,5	G3/4	35	M6	15	M20x1,5	G1/2

20 A/C ...X126

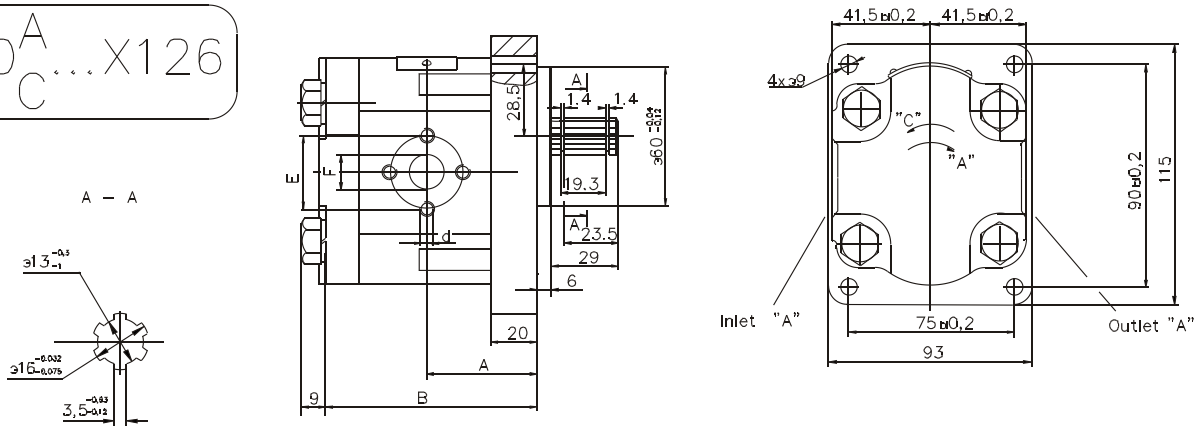

Type	Displacement	Dimensions											
		A	B	Inlet					Outlet				
				E	d	F	M	G	E	d	F	M	G
	cm 3	mm		mm				"	mm				"
20A(C)6,3X126	6,3	48	86	30	M6	13			30	M6	13		
20A(C)8,2X126	8,2	48	87	30	M6	13			30	M6	13		
20A(C)10X126	10	48	89	38	M8	15			38	M8	15		
20A(C)14X126	14	48	96,9	38	M8	15			38	M8	15		
20A(C)16X126	16	48	98,6	38	M8	15			38	M8	15		
20A(C)19X126	19	55,3	103,6	38	M8	15			38	M8	15		

20A(C)...X564H/8SVWG

Rotation "C"

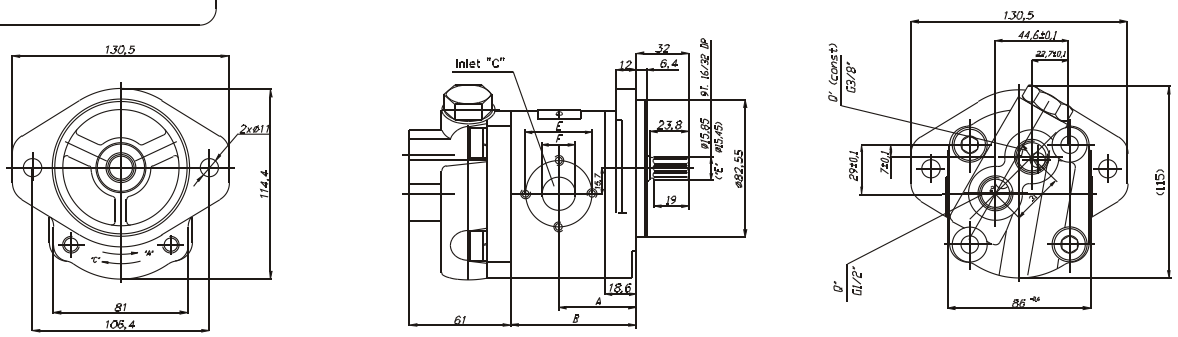

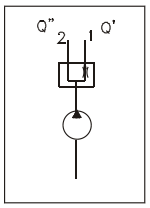

Type	Displacement	Flow Q'	Pressure Pnom	Speed n	Dimensions											
					A	B	Inlet					Outlet				
							E	d	F	M	G	E	d	F	M	G
	cm3	l/min	bar	min⁻¹	mm		mm					mm				
20A(C)15X564H/8SVWG	15	8 +15% −10%	250	650...2500	55,6	92,8	39,7	M8	19							
20A(C)16X564H/8SVWG	16				56,5	94,4										
20A(C)17,3X564H/8SVWG	17,3		230		57,6	96,5										
20A(C)18X564H/8SVWG	18,2		200		58,4	98,1										
20A(C)19X564H/8SVWG	19				59	99,4										
20A(C)22X564H/8SVWG	22				61,5	104,4										
20A(C)25X564H/8SVWG	25		160	650...2000	63,9	109,3										
20A(C)28X564H/8SVWG	28		120		66,4	114,1										
20A(C)32X564H/8SVWG	32		100	650...1500	69,6	120,4										
20A(C)36X564H/8SVWG	36		80		72,8	127										

20 A/C ...X104

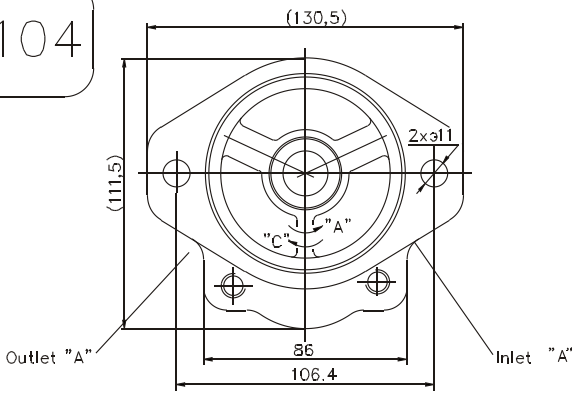

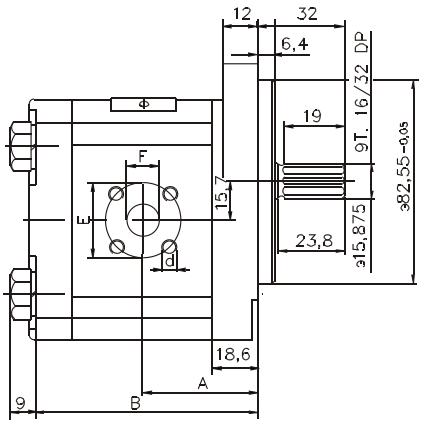

Type	Displacement	Dimensions											
		A	B	Inlet					Outlet				
				E	d	F	M	G	E	d	F	M	G
	cm³	mm		mm					mm				
20A(C)4,5X104	4,5	42,1	79,6	40	M6	15			35	M6	15		
20A(C)6,3X104	6,3	43,6	82,6	40	M6	15			35	M6	15		
20A(C)8,2X104	8,2	45,1	85,5	40	M6	20			35	M6	15		
20A(C)10X104	10	46,6	88,5	40	M6	20			35	M6	15		
20A(C)11X104	11,3	47,6	90,6	40	M6	20			35	M6	15		
20A(C)12X104	12	48,2	91,9	40	M6	20			35	M6	15		
20A(C)14X104	14	49,6	95	40	M6	20			35	M6	15		
20A(C)15X104	15	50,6	96,5	40	M6	20			35	M6	15		
20A(C)16X104	16	51,6	98,1	40	M6	20			35	M6	15		
20A(C)19X104	19	53,6	103,1	40	M6	20			35	M6	15		
20A(C)22X104	22	56,6	108,1	40	M6	20			35	M6	15		
20A(C)25X104	25	58,8	113	40	M6	20			35	M6	15		

20 A/C ...X320

SAE J475
(ISO R725)

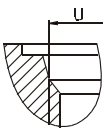

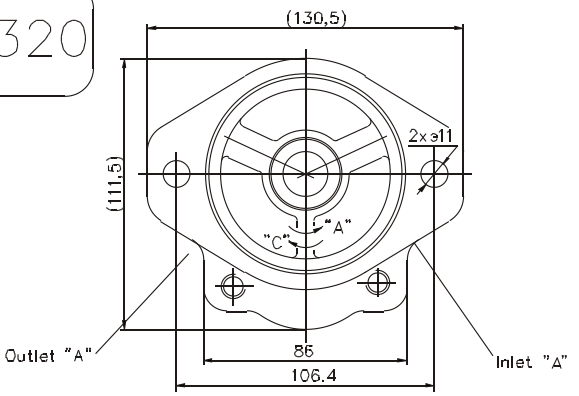

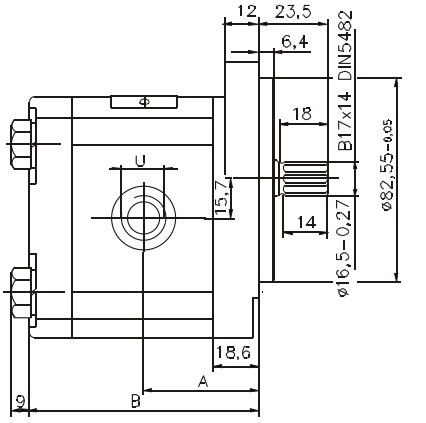

Type	Displacement	Dimensions											
		A	B	Inlet					Outlet				
				E	d	U	M	G	E	d	U	M	G
	cm³	mm		mm					mm				
20A(C)4,5X320						1 1/16" – 12UNF–2B					7/8" – 14UNF–2B		
20A(C)6,3X320													
20A(C)8,2X320													
20A(C)10X320	10	46,5	88,6										
20A(C)11X320	11,3	47,5	90,7										
20A(C)12X320	12	48,2	91,7										
20A(C)14X320	14	49,6	95										
20A(C)15X320	15	50,5	96,5										
20A(C)16X320	16	51,6	98,2										
20A(C)19X320	19	53,5	103,1										
20A(C)22X320	22	56,6	108,1										
20A(C)25X320	25	58,8	113										

20A ...X596

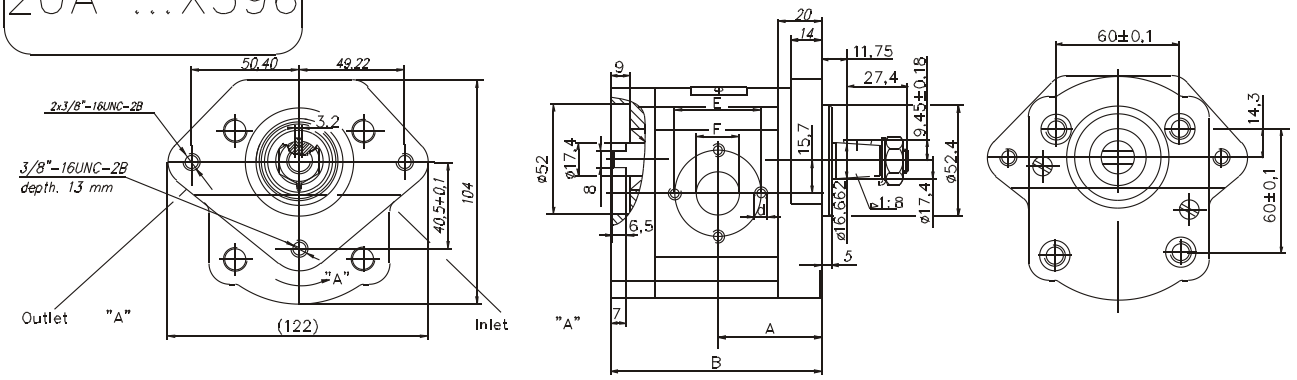

Type	Displacement	Dimensions											
		A	B	Inlet					Outlet				
				E	d	F	M	G	E	d	F	M	G
	cm³	mm		mm				"	mm				"
20A4,5X596	4,5	43,5	88,2	30	M6	13			30	M6	13		
20A6,3X596	6,3	45	91,2	30	M6	13			30	M6	13		
20A8,2X596	8,2	46,5	94,1	30	M6	13			30	M6	13		
20A10X596	10	48	97,2	40	M8	19			30	M6	14		
20A11X596	11,3	49	99,2	40	M8	19			30	M6	14		
20A12X596	12	49,6	100,5	40	M8	19			30	M6	14		
20A14X596	14	51	103,6	40	M8	19			30	M6	14		
20A15X596	15	52	105,1	40	M8	19			30	M6	14		
20A16X596	16	53	106,8	40	M8	19			30	M6	14		
20A19X596	19	55	111,7	40	M8	19			30	M6	14		
20A22X596	22	58	116,7	40	M8	19			30	M6	14		
20A25X596	25	60,2	121,6	40	M8	19			40	M8	19		

20R...X513N

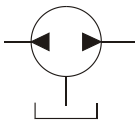

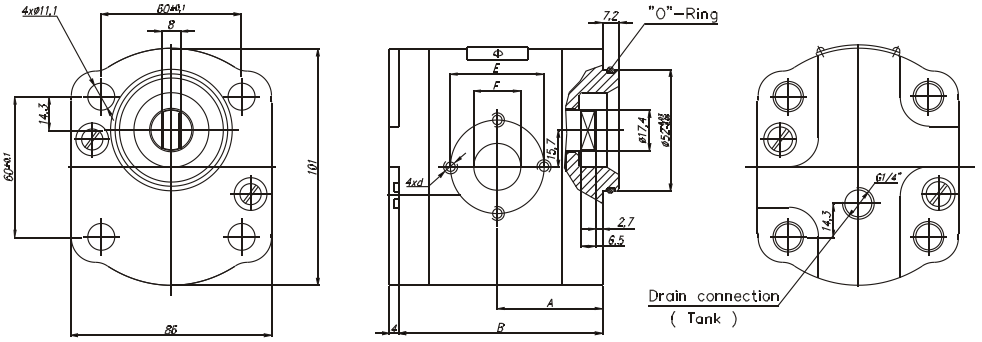

Type	Displacement	Pressure	Frequency	Dimensions								
				A	B	Inlet			Outlet			
						E	F	d	E	F	d	
	q , [см³]	Pnom, [MPa]	n , [мин⁻¹]	mm	mm	mm	mm	mm	mm	mm	mm	
20R4,5X513N	4,5	20	650...3500	40,5	78	30,2±0,1	13,1±0,1	M6-6H	30,2±0,1	13,1±0,1	M6-6H	
20R6,3X513N	6,3			42	81							
20R8,2X513N	8,2			43,5	83,9							
20R10X513N	10			45	87	39,7±0,1	19±0,1	M8-6H	39,7±0,1	19±0,1	M8-6H	
20R11X513N	11			46	89,1							
20R12X513N	12			46,6	90,3							
20R14X513N	14			48	93,4							
20R15X513N	15		650...2500	49	95							
20R16X513N	16			50	96,6							
20R19X513N	19	18		52	101,5							
20R22X513N	22			55	106,5							
20R25X513N	25	16	650...2000	57,2	111,4							

20A/C...X016...

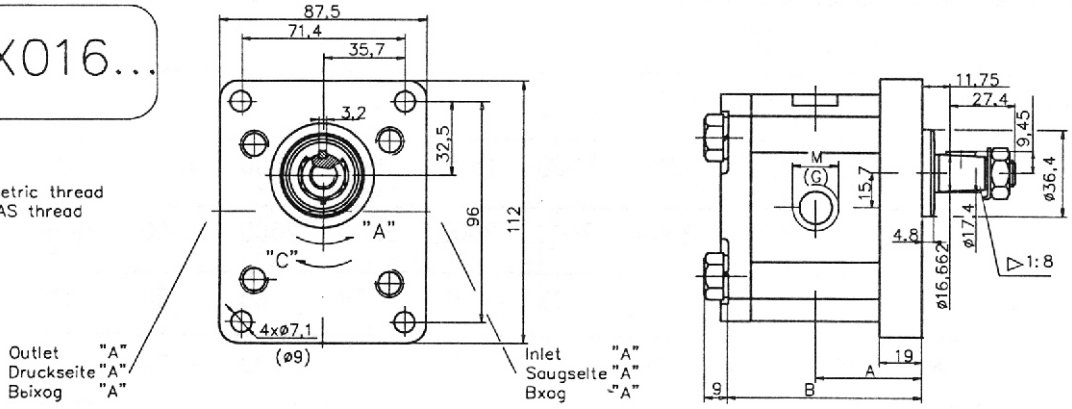

Type / Typ / Тип	Displacement / Foerdervolumen / Рабочий объем	Dimensions Abmessungen Размеры											
		A	B	Inlet Saugseite Вхоg					Outlet Druckseite Выхоg				
				E	d	M	G1	G	E	d	M	G1	G
	cm³	mm		mm				"	mm				"
20A(C)4,5X016...	4,5	42,5	80			M20x1,5		G1/2			M16x1,5		G1/2
20A(C)6,3X016...	6,3	42,5	80			M20x1,5		G1/2			M16x1,5		G1/2
20A(C)8,2X016...	8,2	42,5	80			M20x1,5		G1/2			M16x1,5		G1/2
20A(C)10X016...	10	47	89			M20x1,5		G3/4			M16x1,5		G1/2
20A(C)11X016...	11,3	48	91,1			M20x1,5		G3/4			M16x1,5		G1/2
20A(C)12X016...	12	48,7	92,3			M20x1,5		G3/4			M16x1,5		G1/2
20A(C)14X016...	14	50,2	95,4			M20x1,5		G3/4			M16x1,5		G1/2
20A(C)15X016...	15	51	96,9			M20x1,5		G3/4			M16x1,5		G1/2
20A(C)16X016...	16	51,8	98,6			M20x1,5		G3/4			M16x1,5		G1/2
20A(C)19X016...	19	54,3	103,5			M20x1,5		G3/4			M20x1,5		G1/2
20A(C)22X016...	22	56,8	108,5			M20x1,5		G3/4			M20x1,5		G1/2
20A(C)25X016...	25	59,2	113,4			M20x1,5	G1	G3/4			M20x1,5	G3/4	G1/2

20A...X449N/12SBA

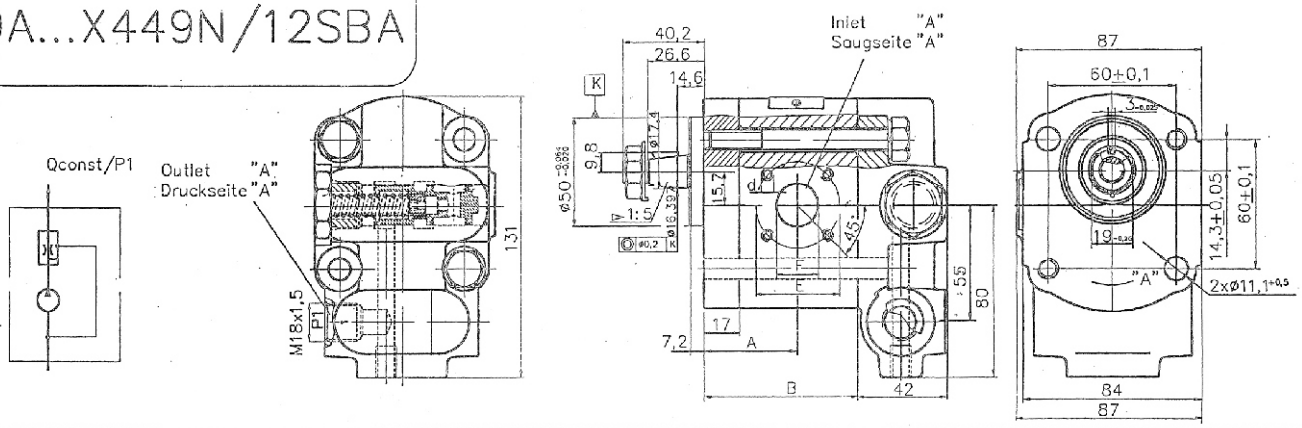

Type / Typ	Displacement / Foerdervolumen	Q'	P1nom	Dimensions					
				A	B	Inlet Saugseite			
						E	d	F	M
	cm³	l/min	Bar	mm		mm			
20A14X449N/12SBA	14	12±1,2	210	45	79,6	40	M6	20	
20A15X449N/12SBA	15		210	45	80,9	40	M6	20	
20A16X449N/12SBA	16		210	45	82,5	40	M6	20	
20A19X449N/12SBA	19		200	45	87,5	40	M6	20	

FLOW RATE

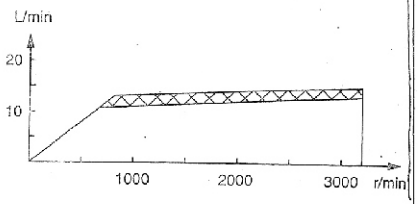

20MR...X543

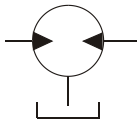

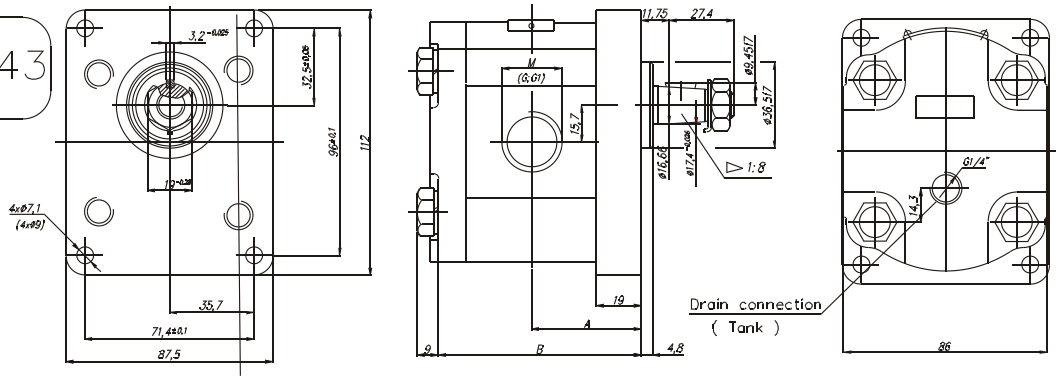

Type	Displacement	Pressure	Frequency	Dimensions							
				A	B	Inlet			Outlet		
						M	G	G1	M	G	G1
	q , [см³]	Pnom, [MPa]	n , [мин⁻¹]	mm	mm	mm			mm		
20MR4,5X543N..	4,5	20	650...3500	42,5	80	M20x1,5	G1/2"	—	M20x1,5	G1/2"	—
20MR6,3X543N..	6,3			44	83						
20MR8,2X543N..	8,2			45,5	85,9						
20MR10X543N...	10			47	89	M27x2	G3/4"		M27x2	G3/4"	
20MR11X543N...	11			48	91,1						
20MR12X543N...	12			48,6	92,3						
20MR14X543N...	14			50	95,4						
20MR15X543N...	15		650...2500	51	96,9						
20MR16X543N...	16			52	98,6						
20MR19X543N...	19	18		54	103,5						
20MR22X543N...	22			57	108,5			G1"			G1"
20MR25X543N...	25	16	650...2000	59,2	113,4						

20MR...X553N...

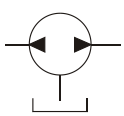

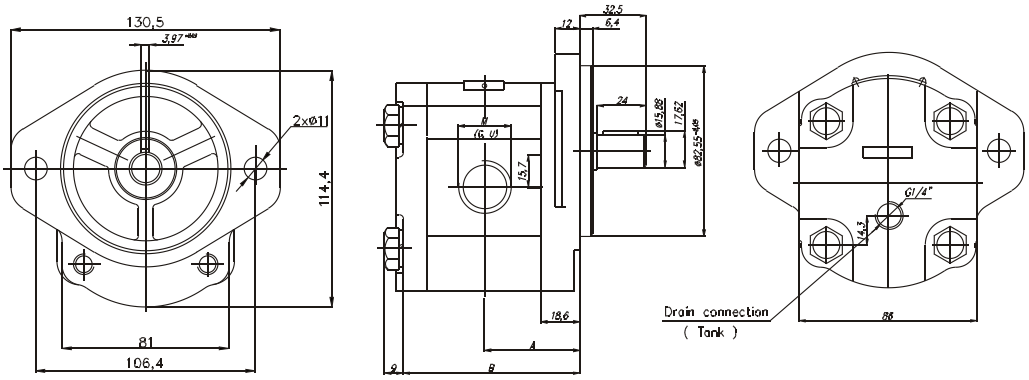

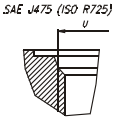

Type	Displacement	Pressure	Frequency	Dimensions							
				A	B	Inlet			Outlet		
						M	G	U	M	G	U
	q , [см³]	Pnom, [MPa]	n , [мин⁻¹]	mm	mm	mm			mm		
20MR4,5X553N..	4,5	20	650...3500	41,4	79,6	M20x1,5	G1/2"	1 1/16" - 12 UNF	M20x1,5	G1/2"	1 1/16" - 12 UNF
20MR6,3X553N..	6,3			42,6	82,6						
20MR 7X553N...	7			44,1	83,7						
20MR8,2X553N..	8,2			44,7	85,5						
20MR10X553N...	10			49,1	88,6	M27x2	G3/4"		M27x2	G3/4"	
20MR11X553N...	11			49,1	90,7						
20MR12X553N...	12			49,1	91,9						
20MR14X553N...	14			49,1	95						
20MR15X553N...	15		650...2500	49,1	96,5						
20MR16X553N...	16			49,1	98,2						
20MR19X553N...	19	18		49,1	103,1						
20MR22X553N...	22			56,6	108,1						
20MR25X553N...	25	16	650...2000	58,8	113						

20 A/C ...X095

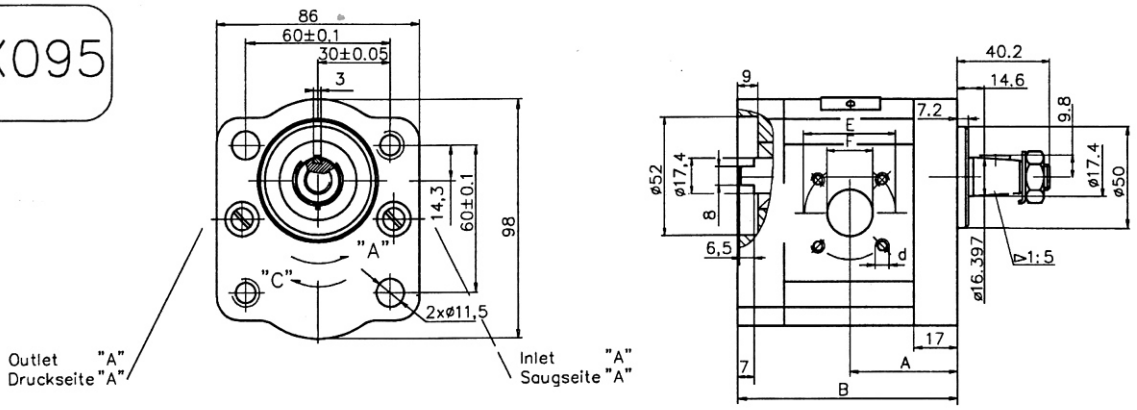

Type Typ	Displacement Foerdervolumen	Dimensions Abmessungen											
		A	B	Inlet Saugseite					Outlet Druckseite				
				E	d	F	M	G	E	d	F	M	G
	cm³	mm		mm				"	mm				"
20A(C)4,5X095	4,5	40,5	85,2	40	M6	15			35	M6	15		
20A(C)6,3X095	6,3	42	88,2	40	M6	15			35	M6	15		
20A(C)8,2X095	8,2	43,5	91,1	40	M6	20			35	M6	15		
20A(C)10X095	10	45	94,2	40	M6	20			35	M6	15		
20A(C)11X095	11,3	46	96,2	40	M6	20			35	M6	15		
20A(C)12X095	12	46,6	97,5	40	M6	20			35	M6	15		
20A(C)14X095	14	48	100,6	40	M6	20			35	M6	15		
20A(C)15X095	15	49	102,1	40	M6	20			35	M6	15		
20A(C)16X095	16	50	103,8	40	M6	20			35	M6	15		
20A(C)19X095	19	52	108,7	40	M6	20			35	M6	15		
20A(C)22X095	22	55	113,7	40	M6	20			35	M6	15		
20A(C)25X095	25	57,2	118,6	40	M6	20			35	M6	15		

20 A/C ...X096

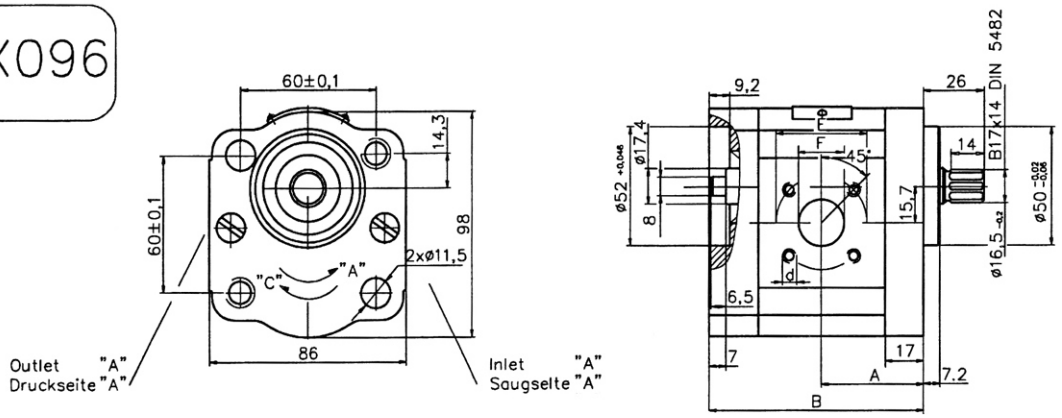

Type Typ	Displacement Foerdervolumen	Dimensions Abmessungen											
		A	B	Inlet Saugseite					Outlet Druckseite				
				E	d	F	M	G	E	d	F	M	G
	cm³	mm		mm				"	mm				"
20A(C)4,5X096	4,5	40,5	85,2	40	M6	15			35	M6	15		
20A(C)6,3X096	6,3	42	88,2	40	M6	15			35	M6	15		
20A(C)8,2X096	8,2	43,5	91,1	40	M6	20			35	M6	15		
20A(C)10X096	10	45	94,2	40	M6	20			35	M6	15		
20A(C)11X096	11,3	46	96,2	40	M6	20			35	M6	15		
20A(C)12X096	12	46,6	97,5	40	M6	20			35	M6	15		
20A(C)14X096	14	48	100,6	40	M6	20			35	M6	15		
20A(C)15X096	15	49	102,1	40	M6	20			35	M6	15		
20A(C)16X096	16	50	103,8	40	M6	20			35	M6	15		
20A(C)19X096	19	52	108,7	40	M6	20			35	M6	15		
20A(C)22X096	22	55	113,7	40	M6	20			35	M6	15		
20A(C)25X096	25	57,2	118,6	40	M6	20			35	M6	15		

20 A/C ...X077

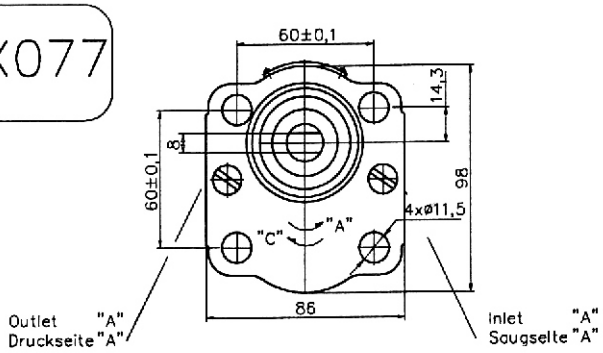

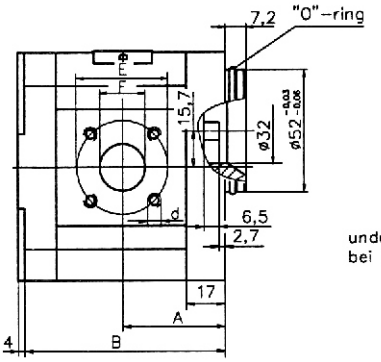

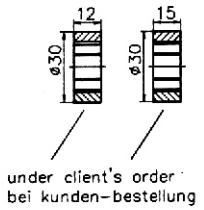

Type Typ	Displacement Foerdervolumen	Dimensions Abmessungen											
		A	B	Inlet Saugseite					Outlet Druckseite				
				E	d	F	M	G	E	d	F	M	G
	cm 3	mm		mm				"	mm				"
20A(C)4,5X077	4,5	37,3	78	40	M6	15			35	M6	15		
20A(C)6,3X077	6,3	38,6	81	40	M6	15			35	M6	15		
20A(C)8,2X077	8,2	40,6	83,9	40	M6	20			35	M6	15		
20A(C)10X077	10	45	87	40	M6	20			35	M6	15		
20A(C)11X077	11,3	45	89	40	M6	20			35	M6	15		
20A(C)12X077	12	45	90,3	40	M6	20			35	M6	15		
20A(C)14X077	14	45	93,4	40	M6	20			35	M6	15		
20A(C)15X077	15	45	94,9	40	M6	20			35	M6	15		
20A(C)16X077	16	45	96,5	40	M6	20			35	M6	15		
20A(C)19X077	19	45	101,5	40	M6	20			35	M6	15		
20A(C)22X077	22	52,5	106,5	40	M6	20			35	M6	15		
20A(C)25X077	25	57,2	111,4	40	M6	20			35	M6	15		
20A(C)12X077A	12	46	90,3	40	M6	20			35	M6	15		

20 A/C ...X205

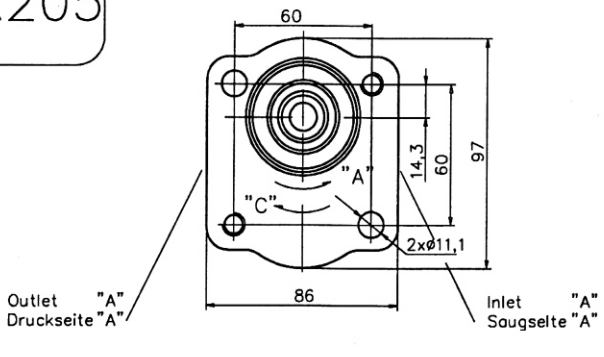

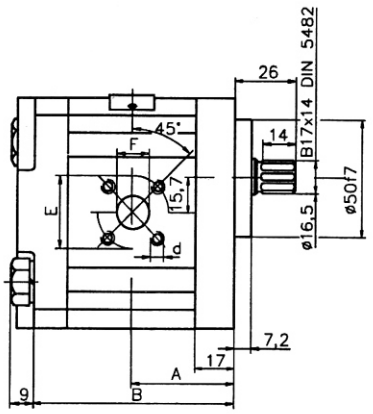

Type Typ	Displacement Foerdervolumen	Dimensions Abmessungen											
		A	B	Inlet Saugseite					Outlet Druckseite				
				E	d	F	M	G	E	d	F	M	G
	cm 3	mm		mm				"	mm				"
20A(C)4,5X205	4,5	37,3	75,1	40	M6	15	M20x1,5	G1/2	35	M6	15	M16x1,5	G1/2
20A(C)6,3X205	6,3	38,6	78	40	M6	15	M20x1,5	G1/2	35	M6	15	M16x1,5	G1/2
20A(C)8,2X205	8,2	40,6	78	40	M6	20	M20x1,5	G1/2	35	M6	15	M16x1,5	G1/2
20A(C)10X205	10	45	87	40	M6	20	M20x1,5	G3/4	35	M6	15	M16x1,5	G1/2
20A(C)11X205	11,3	45	89	40	M6	20	M20x1,5	G3/4	35	M6	15	M16x1,5	G1/2
20A(C)12X205	12	45	90,3	40	M6	20	M20x1,5	G3/4	35	M6	15	M16x1,5	G1/2
20A(C)14X205	14	45	93,4	40	M6	20	M20x1,5	G3/4	35	M6	15	M16x1,5	G1/2
20A(C)15X205	15	45	94,9	40	M6	20	M20x1,5	G3/4	35	M6	15	M16x1,5	G1/2
20A(C)16X205	16	45	96,5	40	M6	20	M20x1,5	G3/4	35	M6	15	M16x1,5	G1/2
20A(C)19X205	19	45	101,5	40	M6	20	M20x1,5	G3/4	35	M6	15	M20x1,5	G1/2
20A(C)22X205	22	52,5	106,5	40	M6	20	M20x1,5	G3/4	35	M6	15	M20x1,5	G1/2
20A(C)25X205	25	57,2	111,4	40	M6	20	M20x1,5	G3/4	35	M6	15	M20x1,5	G1/2

20 A/C ...X464H

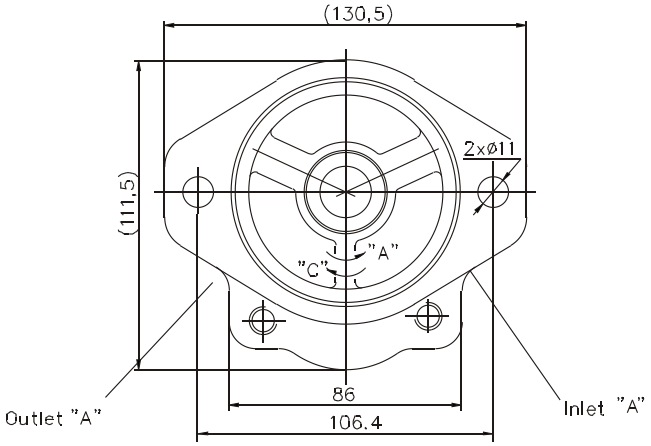

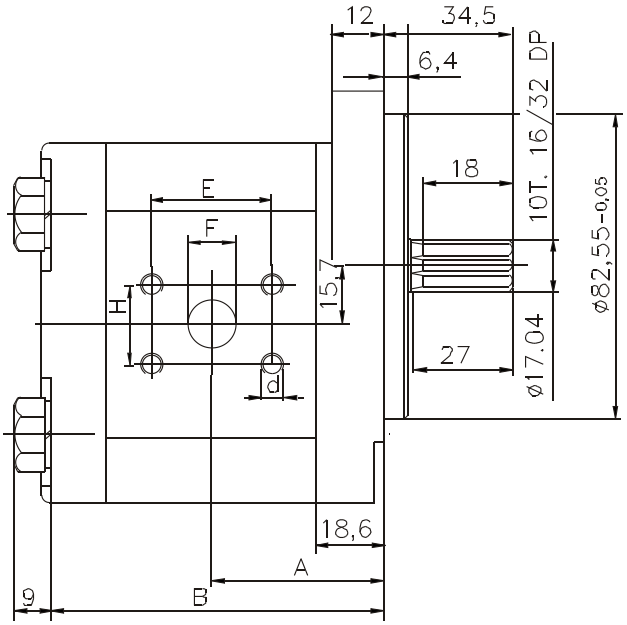

Type	Displacement	Dimensions											
		A	B	Inlet					Outlet				
				E	H	d	F		E	H	d	F	
	cm3	mm		mm					mm				
20A(C)15X464H	15	55.6	106.8	52.7	26.19	3/8-14UNC-2B	25		47.63	22.23	3/8-14UNC-2B	18	
20A(C)16X464H	16	56.5	108.4	52.7	26.19		25		47.63	22.23		18	
20A(C)17.3X464H	17.3	57.6	110.5	52.7	26.19		25		47.63	22.23		18	
20A(C)18.2X464H	18.2	58.4	112.1	52.7	26.19		25		47.63	22.23		18	
20A(C)19X464H	19	59	113.4	52.7	26.19		25		47.63	22.23		18	
20A(C)22X464H	225	61.5	118.4	52.7	26.19		25		47.63	22.23		18	
20A(C)25X464H	25	63.9	123.3	52.7	26.19		25		47.63	22.23		18	
20A(C)28X464H	28	66.4	128.1	52.7	26.19		25		47.63	22.23		18	
20A(C)32X464H	32	69.6	134.4	52.7	26.19		25		47.63	22.23		18	
20A(C)36X464H	36	72.8	141	52.7	26.19		25		47.63	22.23		18	

20A...X410N-12/10JDW

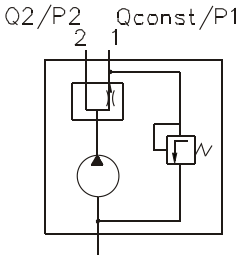

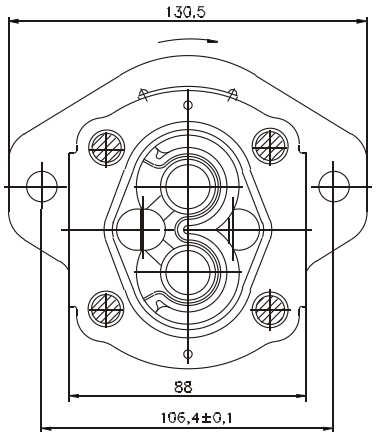

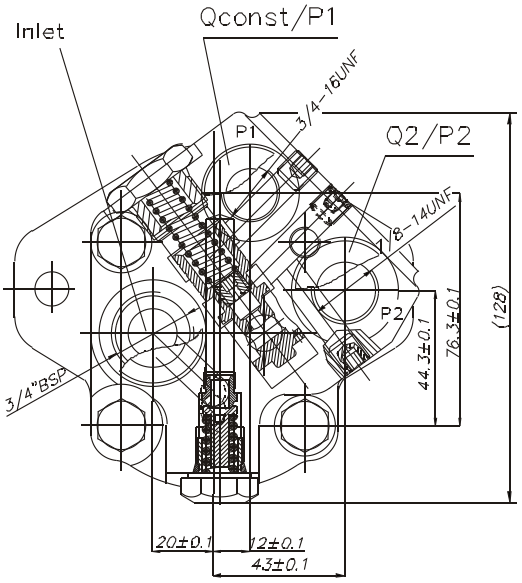

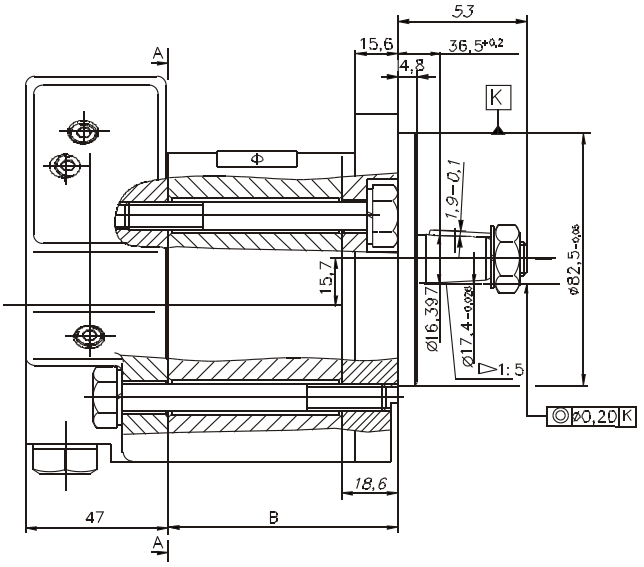

Type	Displacement	Qconst	P1	Dimensions											
				A	B	Inlet					Outlet				
						E	d	F	M	G	E	d	F	M	G
	cm^3	l/min	Bar	mm		mm				"	mm				"
2GA10X410N-12/10JDW	10														
2GA11X410N-12/10JDW	11,3														
2GA12X410N-12/10JDW	12														
2GA14X410N-12/10JDW	14														
2GA15X410N-12/10JDW	15	12±1,2	100±5												
2GA16X410N-12/10JDW	16														
2GA19X410N-12/10JDW	19				89,1										
2GA22X410N-12/10JDW	22														
2GA25X410N-12/10JDW	25														
2GA17,3X410N-12/10JDW	17,3				86,2										

Pump agregate 20A6,3X620/A2A21MF1S

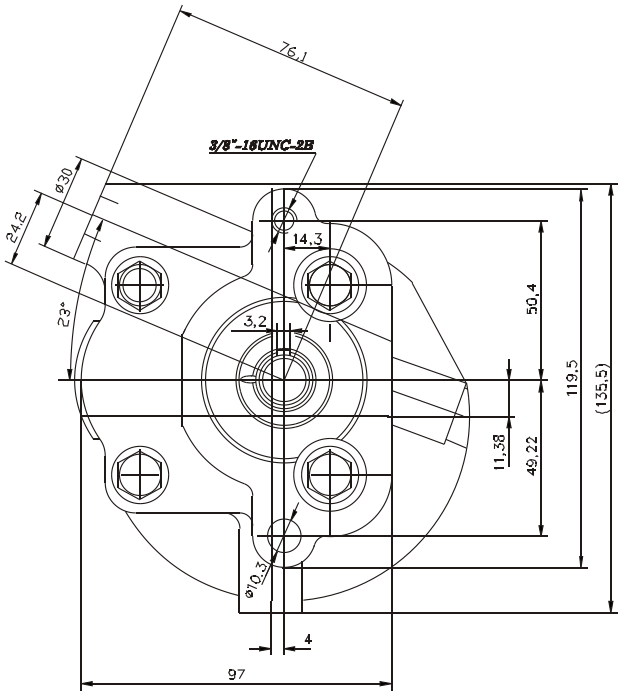

Hydraulic scheme

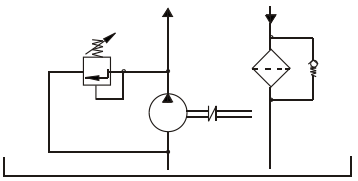

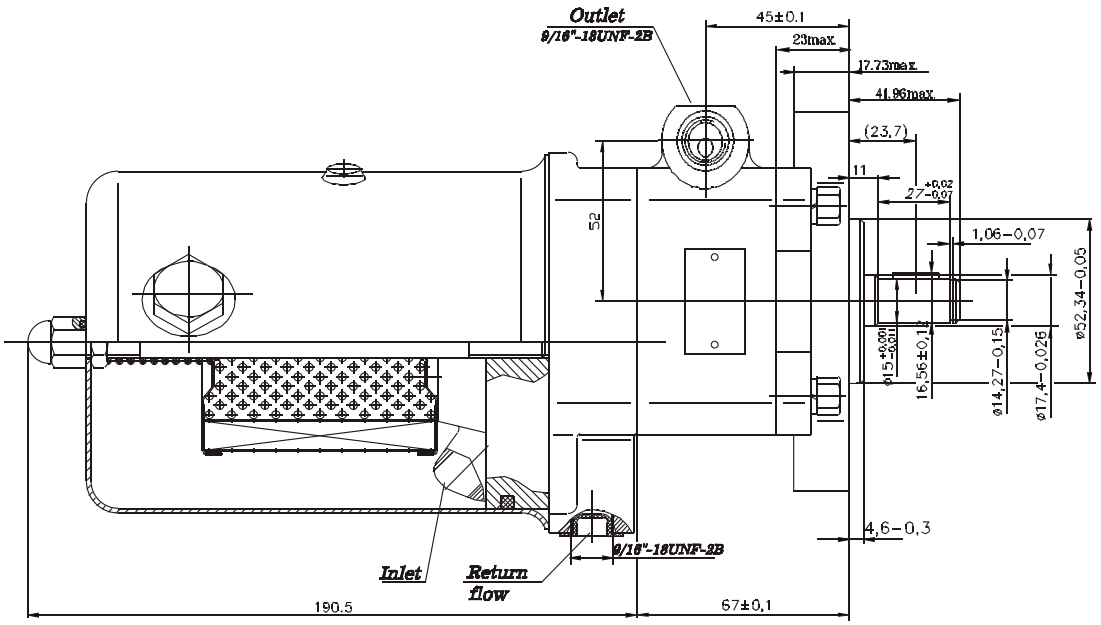

Technical data

1.Nominal pressure /for the pump/ P_n-200bar.
2.Operating pressure /for the pressure valve/ P_r-100+5bar.
3.Flow at 1500 min^{-1}-9 l/min.
4.Max. revolutions n_{max}-4000 min^{-1}.
5. Capacyty of the tank ≈ 1 l.
6.Filtration-0.025 μm.

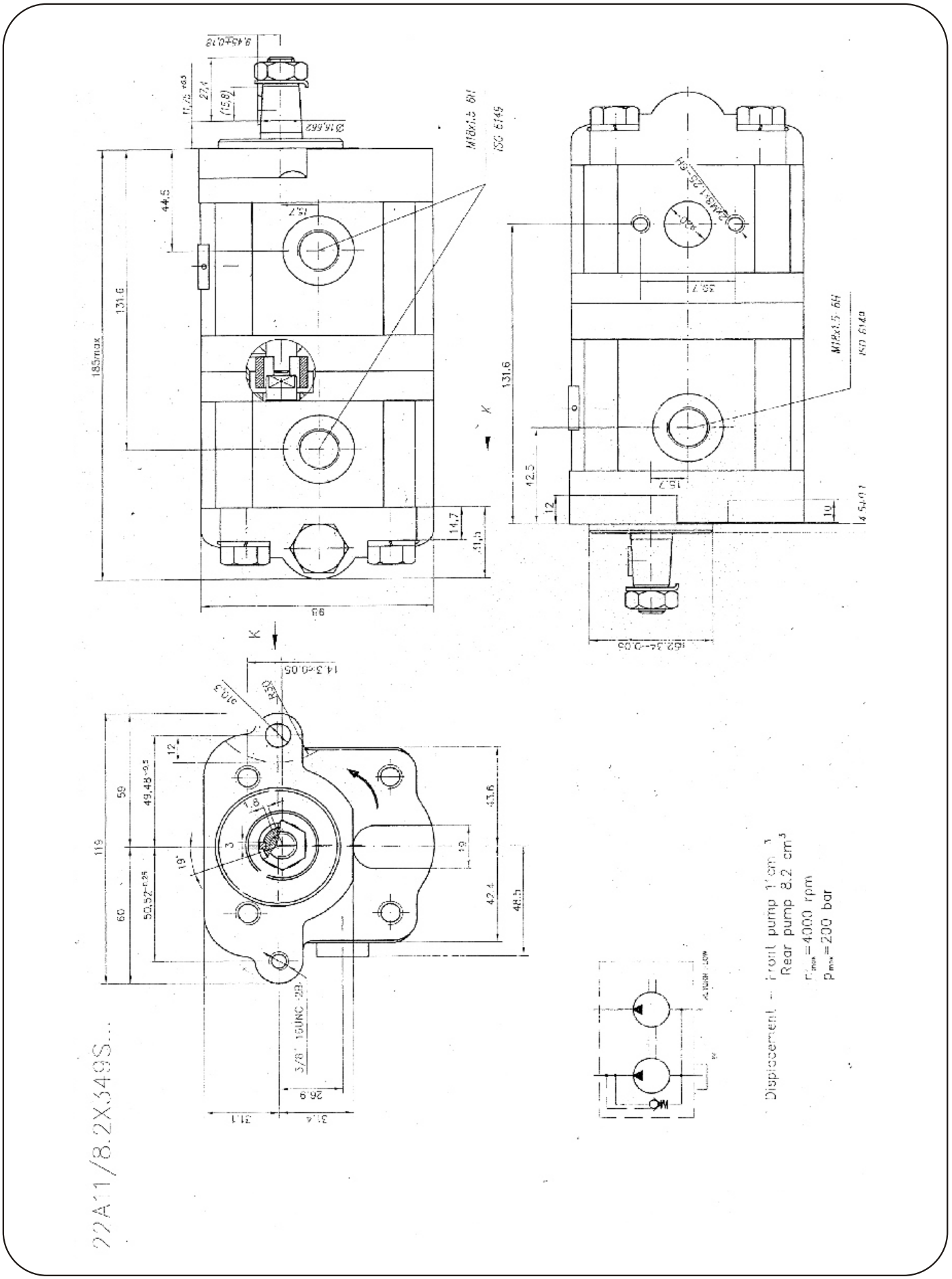
22A1/8.2X349S...
Displacement - Front pump 1 cm³
Rear pump 8.2 cm³
n max=4000 rpm
p max=200 bar
M18x1.5 6H
ISO 6149
185max
131.6
44.5
98
119
59
60
49.48
50.52
43.6
42.4
48.5
26.9
31.4
31.1
3/8" 16UNC-2B
14.3-0.05
31.3
12
19
18°
K

Pump agregate 20C6,3X351/A1A20MF2

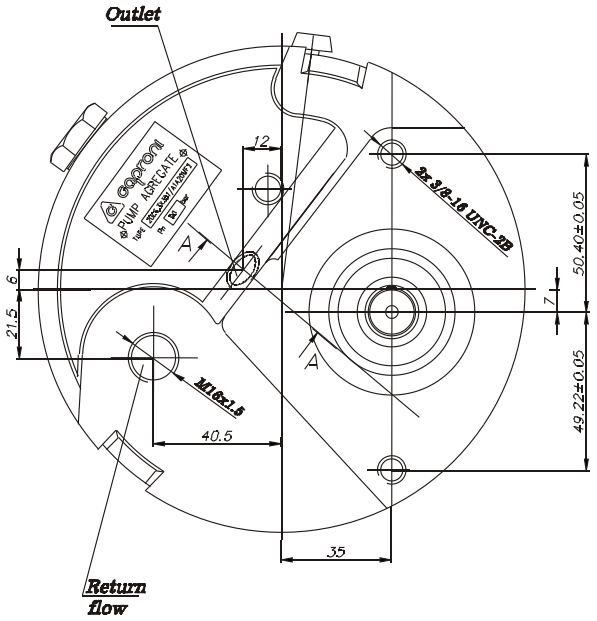

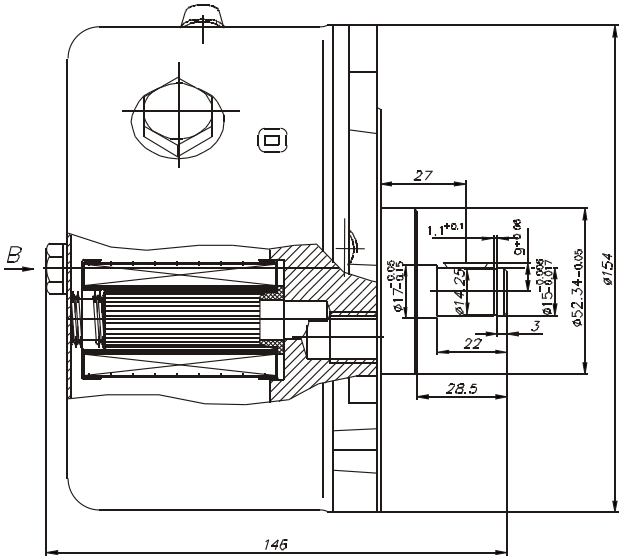

B
(without tank)

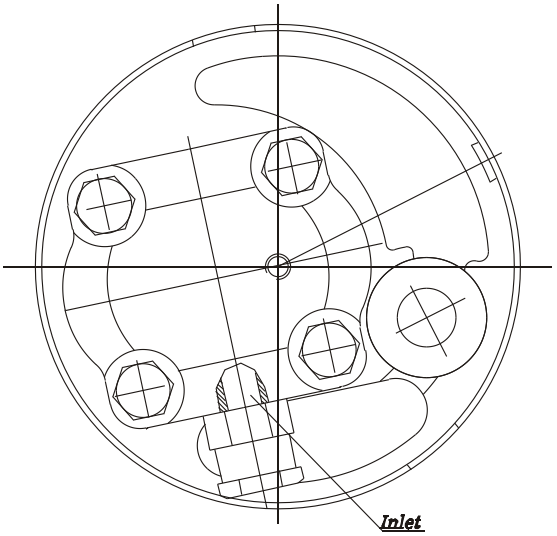

Hydraulic scheme

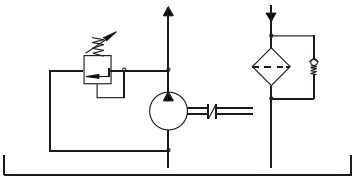

A–A

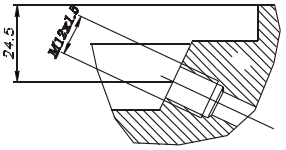

Technical data

1.Nominal pressure /for the pump/ P_n-200bar.
2.Operating pressure /for the pressure valve/ P_r-90+5bar.
3.Flow at 1500 min^{-1}-9 l/min.
4.Max. revolutions n_{max}-4000 min^{-1}.
5. Capacyty of the≈ 1 l.
6.Filtration-0.025 μm.

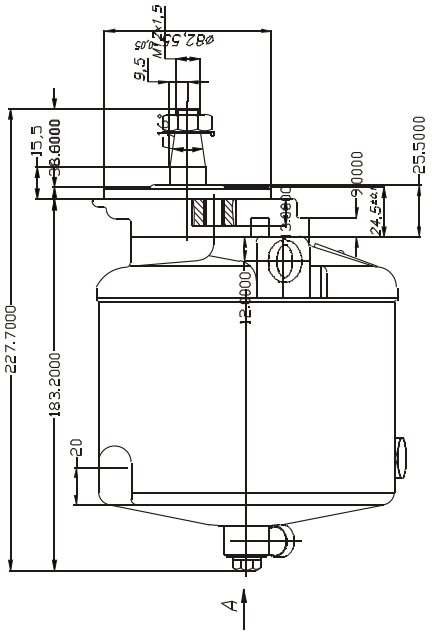

Technical data:

Nominal pressure /for the pump/ – Pn=200bar
Operating pressure – Pr=85+5 bar.
Flow at 1500 min -1 – 9 l/min
Max. revolutions max n ≡1 3500 min
Filtration – 0,025 μm.
Capacity of the tank ~ 1,5l.

Hydraulic scheme

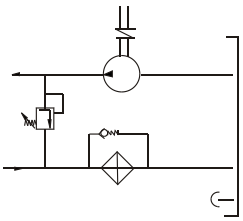

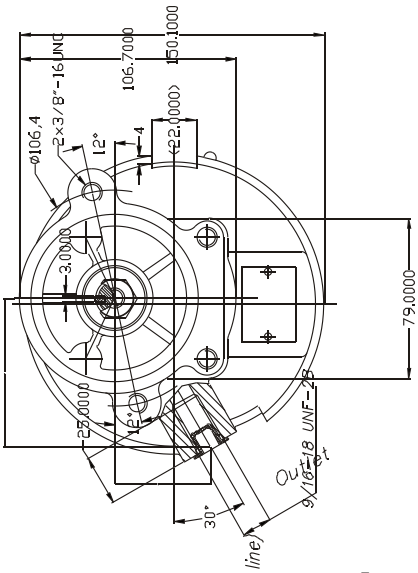

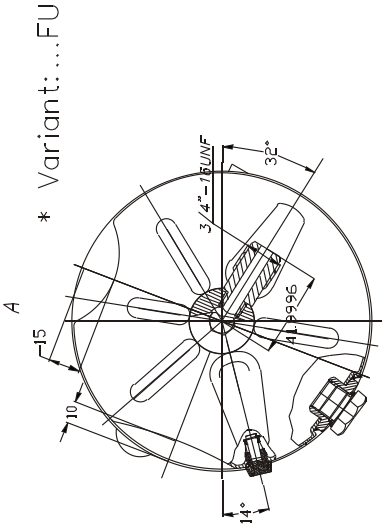

20A11X570/A1A40F
20A11X570/A1A40FU*

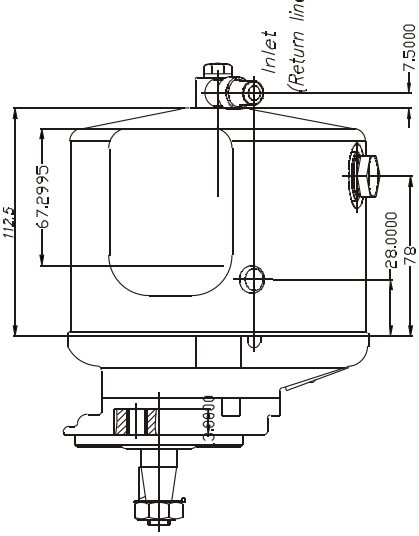

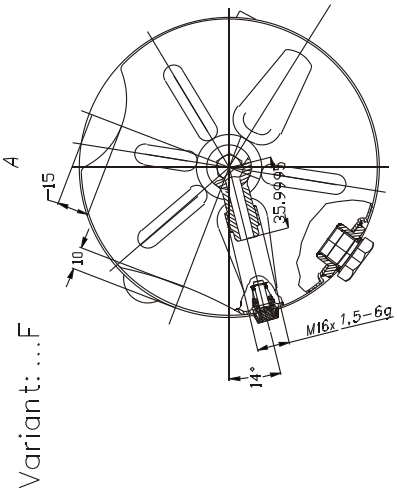

NON STANDARD

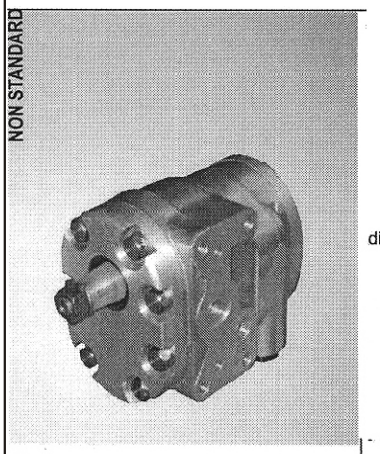

7,0 kg

symbol

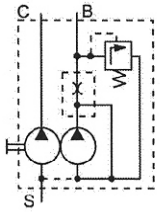

diagram

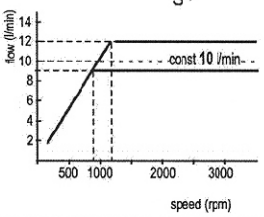

designation	tractor	displacement (cm3)	pressure (bar)	speed (/min) / (rpm)
3117.208.22	UTB650, UTB651M	20 + 10	nom. 120/50 - max. 150/80	min.500 - nom.1500 - max.3000

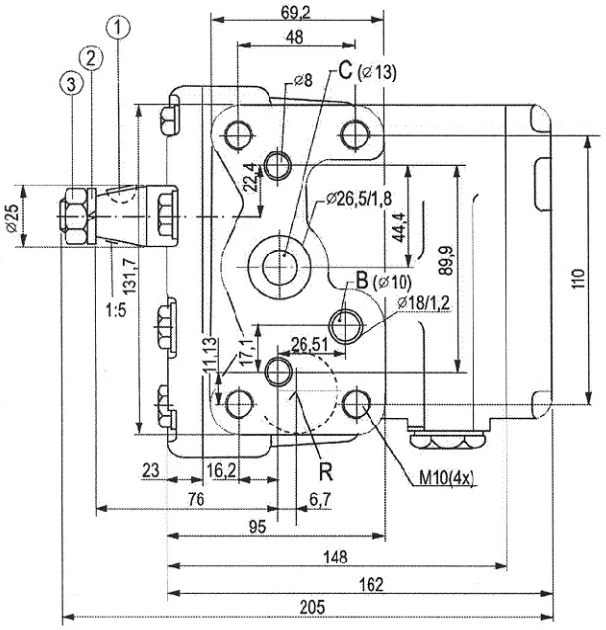

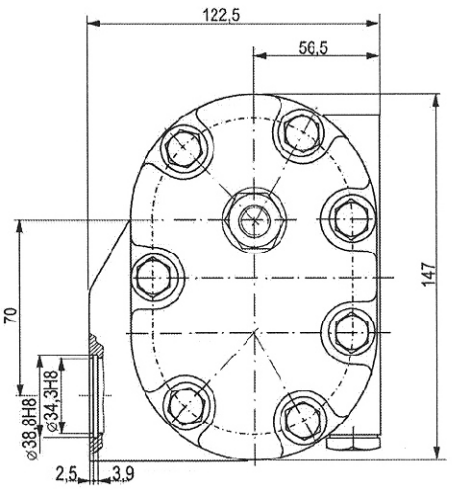

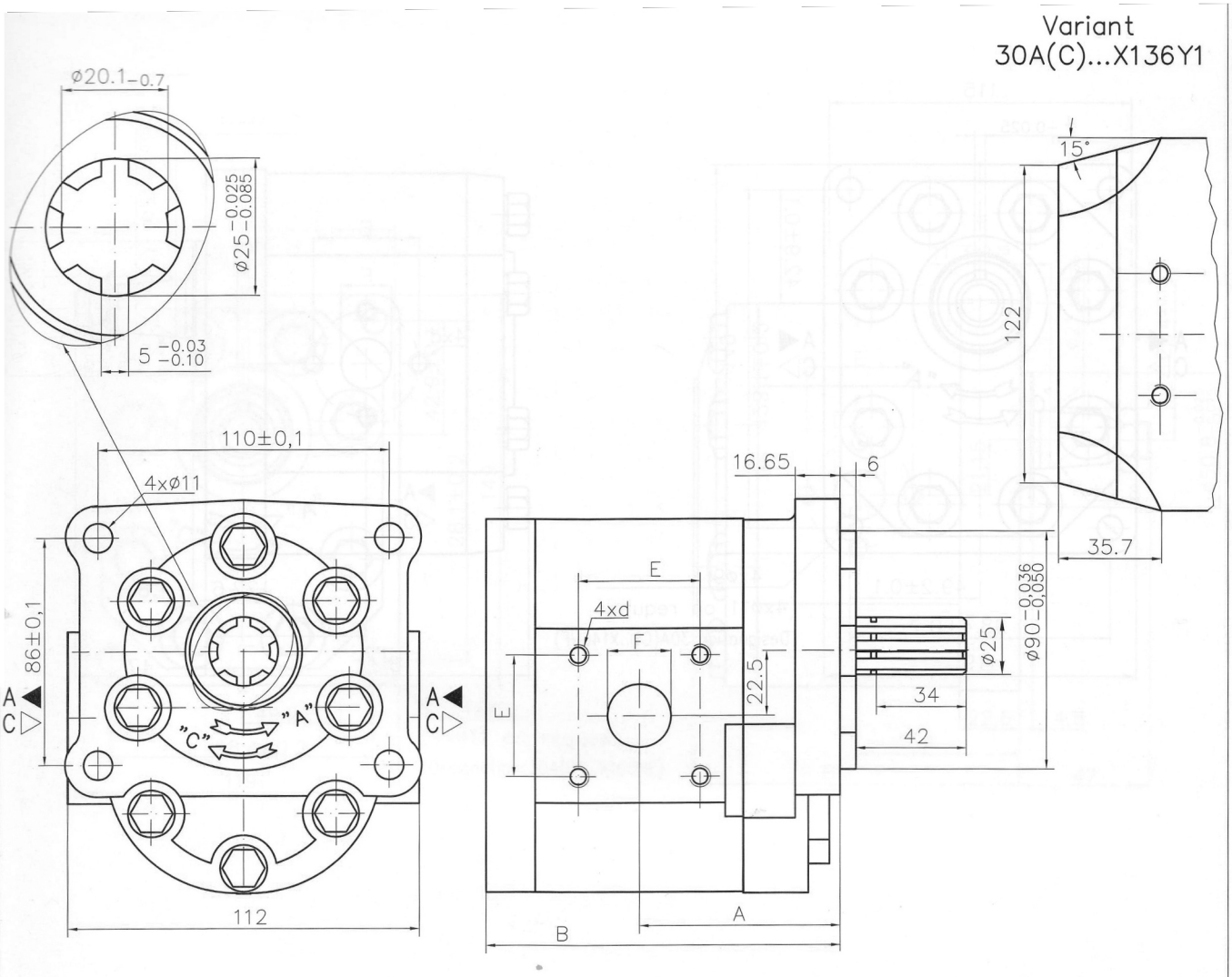

Type	Displacement	Flow		Pressure	max Speed	Dimension							
		at 1500 rpm	at max rpm	P_{nom}	n	A	B	Inlet			Outlet		
	cm^3/rev	l/min	l/min	bar	rpm	mm	mm	E	d	F	E	d	F
30A(C)25X136Y	24,5	34,5	69,1	200	3000	64,0	121,7	46	M8	20	46	M8	20
30A(C)32X136Y	32	45,1	75,2	200	2500	67,6	128,9			22			22
30A(C)46X136Y	46	65,6	100,5	190	2300	72,5	141,4	54	M10	27	54	M10	27
30A(C)50X136Y	50	71,3	99,8	175	2100	72,5	145,0						
30A(C)20X136Y1	19,5	27,5	55,0	200	3000	61,8	117,2	46	M8	19	46	M8	19
30A(C)25X136Y1	24,5	34,5	57,6	200	2500	64,0	121,6			20			20
30A(C)32X136Y1	32	45,1	75,2	200	2500	67,6	128,9			22			22
30A(C)46X136Y1	46	65,6	100,5	190	2300	72,5	141,4	54	M10	27	54	M10	27
30A(C)50X136Y1	50	71,3	99,8	175	2100	72,5	145,0						

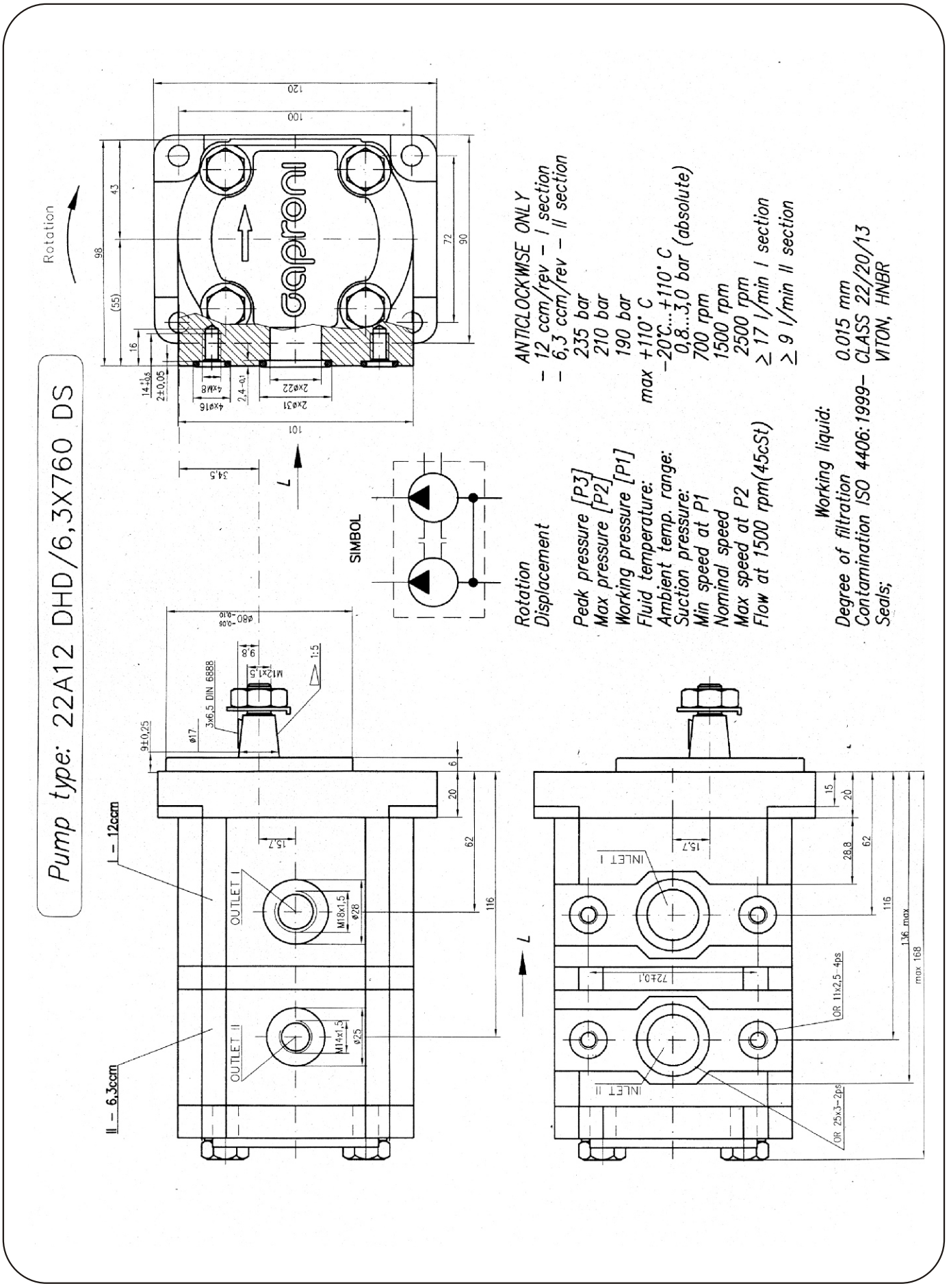
Pump type: 22A12 DHD/6,3X760 DS
Rotation
SIMBOL
I – 12ccm
II – 6,3ccm
OUTLET I
OUTLET II
INLET I
INLET II
ANTICLOCKWISE ONLY
– 12 ccm/rev – I section
– 6,3 ccm/rev – II section
Rotation
Displacement
235 bar
Peak pressure [P3]
210 bar
Max pressure [P2]
190 bar
Working pressure [P1]
max +110° C
Fluid temperature:
–20°C...+110° C
Ambient temp. range:
0,8...3,0 bar (absolute)
Suction pressure:
700 rpm
Min speed at P1
1500 rpm
Nominal speed
2500 rpm
Max speed at P2
≥ 17 l/min I section
Flow at 1500 rpm(45cSt)
≥ 9 l/min II section
Working liquid:
0.015 mm
Degree of filtration
CLASS 22/20/13
Contamination ISO 4406:1999–
VITON, HNBR
Seals;

NON STANDARD

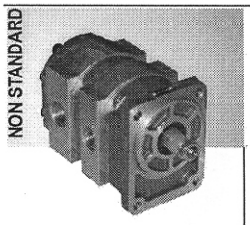

symbol

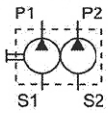

designation

ZPB.F5/11.A9.K2.L

DRIVE: V-BELT OR GEAR WHEEL

5,3 kg

combine

DOMINATOR 96, DOMINATOR 98

displacement (cm^3)

5,5 + 11

pressure (bar)

nom. 90/90 - max. 100/100

speed (/min) / (rpm)

min.500 - nom.1500 - max.3000

NON STANDARD

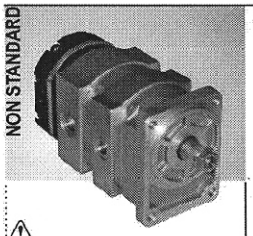

symbol

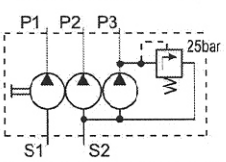

designation

ZPB.F5/11/4.A9.K2.L

DRIVE: V-BELT OR GEAR WHEEL

6,5 kg

combine

MEGA II 208, MEGA II 202,
MEGA II 203, MEGA II 204, MEGA II 218

displacement (cm^3)

5,5 + 11 + 4

pressure (bar)

nom. 90/90/20 - max. 100/100/25

speed (/min) / (rpm)

min.500 - nom.1500 - max.3000

Designation: ZPB.F5/11.A9.K2.L

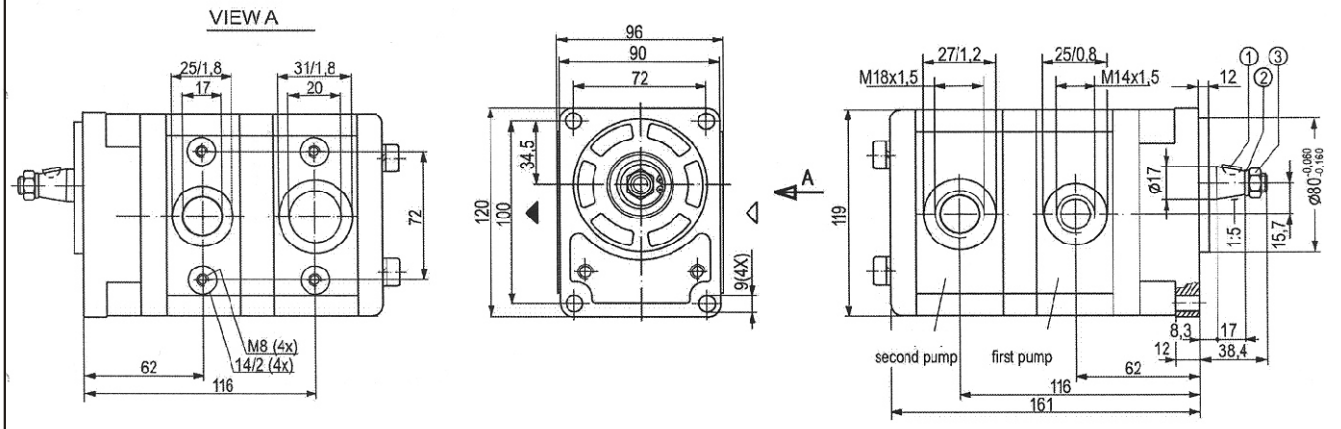

① key 3x6,5 JUS M.C2.050 ② washer B12 JUS M.B2.110 ③ nut M12 JUS M.B1.601

Designation: ZPB.F5/11/4.A9.K2.L

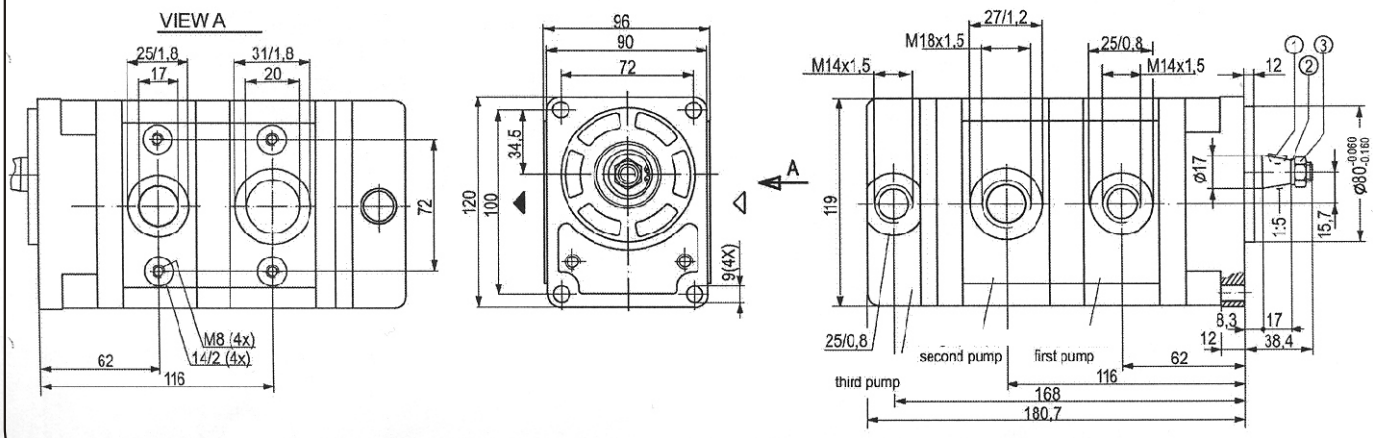

Used symbols:

q - displacement
p_{nom} - nominal pressure
n_{min} - minimal speed
n_{nom} - nominal speed
n_{max} - maximal speed
P_{nom} - power at p_{nom} and n_{nom}
P_{max} - power at p_{nom} and n_{max}

volumetric efficiencies:

η_{qmin} - at min. speed
η_{qnom} - at nom. speed
η_{qmax} - at max. speed

efficiencies:

η_{min} - at min. speed
η_{nom} - at nom. speed
η_{max} - at max. speed

q	cm^3	20H	22.5H	25H	28H	32 32H	36 36H	42 42H	46H	50H	55H	60H
p_{nom}	bar	250	250	250	250	250	250	230	230	200	200	200
n_{min}	min^{-1}	650	650	650	650	650	650	650	650	650	650	650
n_{nom}	min^{-1}	1500	1500	1500	1500	1500	1500	1500	1500	1500	1500	1500
n_{max}	min^{-1}	2500	2500	2500	2500	2500	2300	2300	2100	2100	1750	1750
η_{qmin}	%	80	80	82	83	83	83	84	84	85	85	85
η_{min}	%	73	73	74	75	75	76	76	77	78	78	78
η_{qnom}	%	94	94	94	94	94	94	95	95	95	95	95
η_{nom}	%	85	85	86	86	86	86	85	85	85	85	85
η_{qmax}	%	93	93	93	94	94	94	94	94	94	94	94
η_{max}	%	83	83	84	84	84	84	84	83	83	83	83
P_{nom}	kW	13.5	15.3	16.8	18.8	22.5	25	27.5	30	28	33	36
P_{max}	kW	23	26	28	31.5	36	38	41.5	41	44.5	38	41.5

30 A/C ...X146...

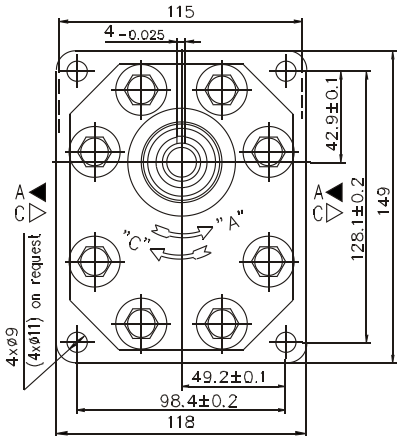

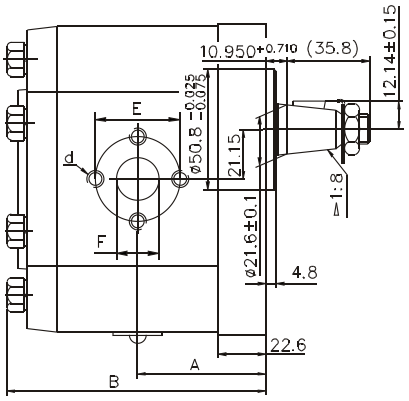

Type	Displacement	Dimensions											
		A	B	Inlet					Outlet				
				E	d	F	M	G	E	d	F	M	G
	cm³	mm		mm				"	mm				"
30A(C)20X146H	20	56.1	116.7	40	M8	19			40	M8	19		
30A(C)22.5X146H	22.5	57.6	119.7	40	M8	19			40	M8	19		
30A(C)25X146H	25	58.3	121.1	40	M8	19			40	M8	19		
30A(C)28X146H	28	60.2	124.7	40	M8	19			40	M8	19		
30A(C)32X146	32	62	128.3	51	M10	27			40	M8	19		
30A(C)32X146H	32	66.5	137.3	51	M10	27			40	M8	19		
30A(C)36X146	36	63.5	131.4	51	M10	27			40	M8	19		
30A(C)36X146H	36	68	140.5	51	M10	27			40	M8	19		
30A(C)42X146	42	66.3	137	51	M10	27			40	M8	19		
30A(C)42X146H	42	70.8	146.1	51	M10	27			40	M8	19		
30A(C)46X146H	46	72.7	149.8	51	M10	27			40	M8	19		
30A(C)50X146H	50	74.5	153.4	51	M10	27			40	M8	19		
30A(C)55X146H	55	76.7	157.9	51	M10	27			40	M8	19		
30A(C)60X146H	60	78.7	162.4	51	M10	27			40	M8	19		

30 A/C ...X236...

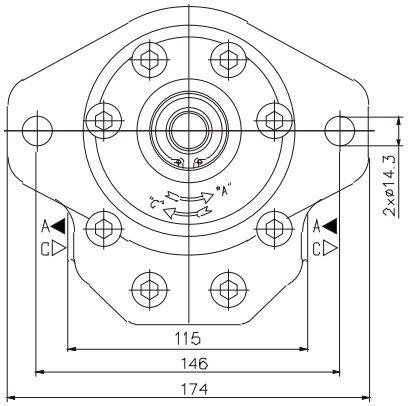

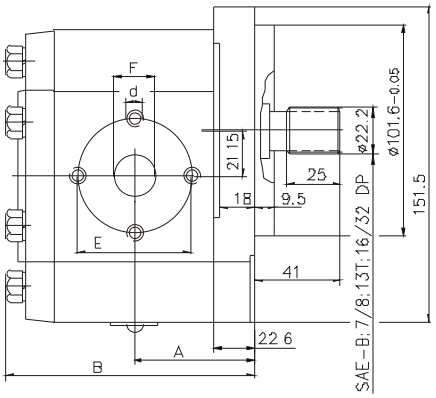

Type	Displacement	Dimensions											
		A	B	Inlet					Outlet				
				E	d	F	M	G	E	d	F	M	G
	cm³	mm		mm				"	mm				"
30A(C)20X236H	20	56.1	116.7	40	M8	19			40	M8	19		
30A(C)22.5X236H	22.5	57.6	119.7	40	M8	19			40	M8	19		
30A(C)25X236H	25	58.3	121.1	40	M8	19			40	M8	19		
30A(C)28X236H	28	60.2	124.7	40	M8	19			40	M8	19		
30A(C)32X236	32	62	128.3	51	M10	27			40	M8	19		
30A(C)32X236H	32	66.5	137.3	51	M10	27			40	M8	19		
30A(C)36X236	36	63.5	131.4	51	M10	27			40	M8	19		
30A(C)36X236H	36	68	140.5	51	M10	27			40	M8	19		
30A(C)42X236	42	66.3	137	51	M10	27			40	M8	19		
30A(C)42X236H	42	70.8	146.1	51	M10	27			40	M8	19		
30A(C)46X236H	46	72.7	149.8	51	M10	27			40	M8	19		
30A(C)50X236H	50	74.5	153.4	51	M10	27			40	M8	19		
30A(C)55X236H	55	76.7	157.9	51	M10	27			40	M8	19		
30A(C)60X236H	60	78.7	162.4	51	M10	27			40	M8	19		

30A(C)...X309H

Gr. 30 250 bar

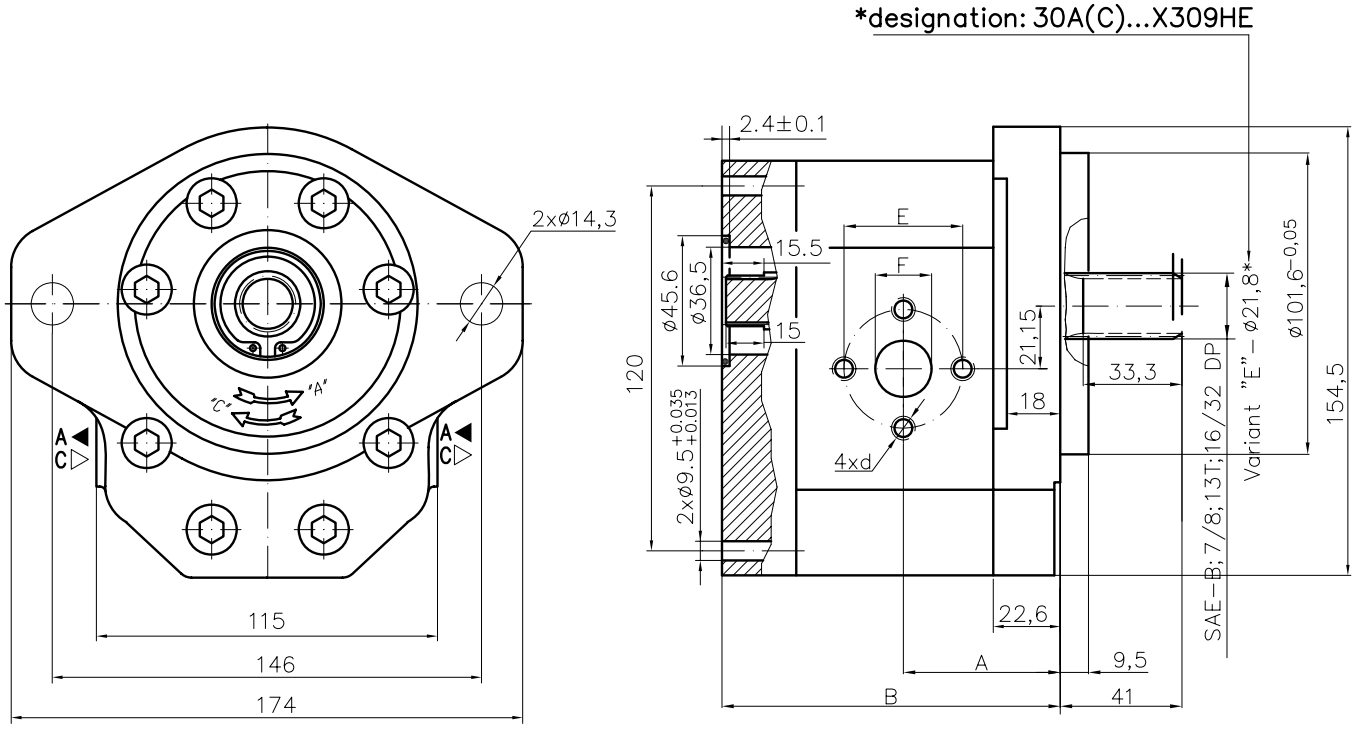

Type	Displacement	Flow		Pressure	max Speed	Dimension							
		at 1500 rpm	at max rpm	P_{nom}	n	A	B	Inlet			Outlet		
	cm^3/rev	l/min	l/min	bar	rpm	mm	mm	E	d	F	E	d	F
30A(C)20X309H	20	28,2	56,4	250	3000	56,1	114,7	40	M8	19	40	M8	19
30A(C)22,2X309H	22,5	31,7	63,5	250	3000	57,6	117,7						
30A(C)25X309H	25	35,3	70,5	250	3000	58,3	119,1						
30A(C)28X309H	28	39,5	79,0	250	3000	60,2	122,7						
30A(C)32X309	32	45,1	75,2	250	2500	62,0	126,3						
30A(C)32X309H	32	45,1	90,2	250	3000	66,5	135,3						
30A(C)36X309	36	50,8	84,6	250	2500	63,5	129,4						
30A(C)36X309H	36	51,3	95,8	250	2800	68,0	138,5						
30A(C)42X309	42	59,9	91,8	230	2300	66,3	135,0	51	M10	27			
30A(C)42X309H	42	59,9	99,8	230	2500	70,8	144,0						
30A(C)46X309H	46	65,6	100,5	230	2300	72,7	147,8						
30A(C)50X309H	50	71,3	99,8	200	2100	74,5	151,4						
30A(C)55X309H	55	78,4	91,4	200	1750	76,7	155,9						
30A(C)60X309H	60	85,5	99,8	180	1750	78,7	160,4						

30A(C)...X337H

Gr. 30 250 bar

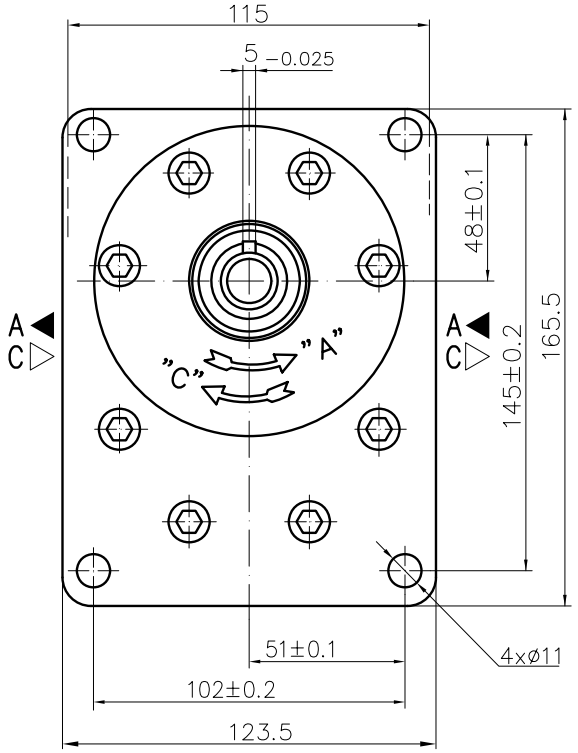

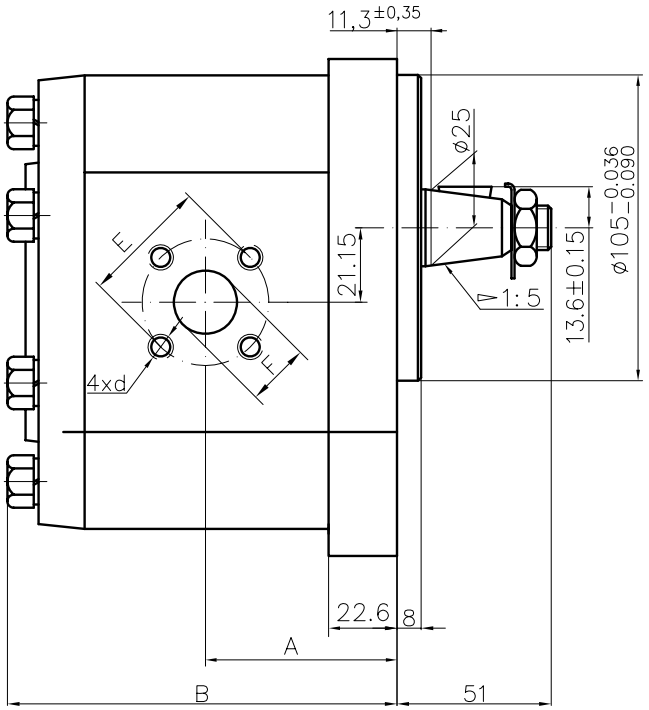

Type	Displacement	Flow		Pressure	max Speed	Dimension							
		at 1500 rpm	at max rpm	P_{nom}	n	A	B	Inlet			Outlet		
	cm^3/rev	l/min	l/min	bar	rpm	mm	mm	E	d	F	E	d	F
30A(C)20X337H	20	28,2	56,4	250	3000	56,1	116,7	40	M8	19	40	M8	19
30A(C)22,2X337H	22,5	31,7	63,5	250	3000	57,6	119,7						
30A(C)25X337H	25	35,3	70,5	250	3000	58,3	121,1						
30A(C)28X337H	28	39,5	79,0	250	3000	60,2	124,7						
30A(C)32X337	32	45,1	75,2	250	2500	62,0	128,3						
30A(C)32X337H	32	45,1	90,2	250	3000	66,5	137,3						
30A(C)36X337	36	50,8	84,6	250	2500	63,5	131,4						
30A(C)36X337H	36	51,3	95,8	250	2800	68,0	140,5						
30A(C)42X337	42	59,9	91,8	230	2300	66,3	137,0	55		27	55		
30A(C)42X337H	42	59,9	99,8	230	2500	70,8	146,1						
30A(C)46X337H	46	65,6	100,5	230	2300	72,7	149,8						
30A(C)50X337H	50	71,3	99,8	200	2100	74,5	153,4						
30A(C)55X337H	55	78,4	91,4	200	1750	76,7	157,9						
30A(C)60X337H	60	85,5	99,8	180	1750	78,7	162,4						

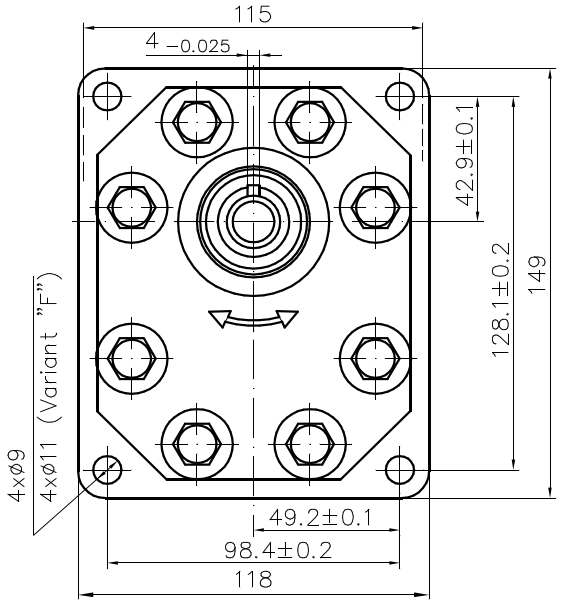

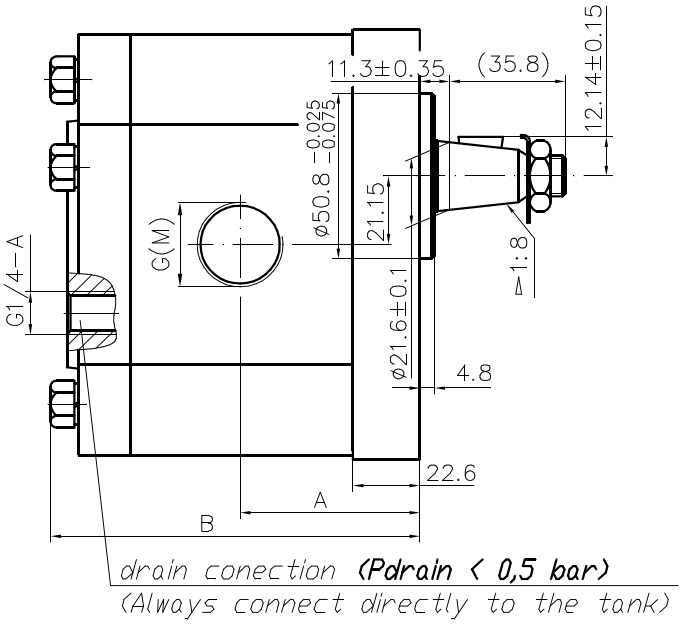

Symbol

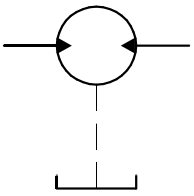

Type for 4xØ11:
30MR...X568HG(M)F

Type	Displacement	Pressure	Speed	Dimensions					
				A	B	Inlet		Outlet	
						M	G	M	G
	cm 3	Pmax, [bar	n [min −1]	mm		mm	"	mm	"
30MR22.5X568HG(M)	22.5	200	500 ... 2500	57.6	119.7	M27x1.5	G3/4−A	M27x1.5	G3/4−A
30MR25X568HG(M)	25	200	500 ... 2500	58.3	121.1	M27x1.5	G3/4−A	M27x1.5	G3/4−A
30MR28X568HG(M)	28	200	500 ... 2500	60.2	124.7	M27x1.5	G3/4−A	M27x1.5	G3/4−A
30MR32X568HG(M)	32	200	500 ... 2500	66.5	137.3	M33x1.5	G1−A	M33x1.5	G1−A
30MR36X568HG(M)	36	200	500 ... 2300	68	140.5	M33x1.5	G1−A	M33x1.5	G1−A
30MR42X568HG(M)	42	200	500 ... 2300	70.8	146.1	M33x1.5	G1−A	M33x1.5	G1−A
30MR46X568HG(M)	46	200	500 ... 2100	72.7	149.8	M33x1.5	G1−A	M33x1.5	G1−A
30MR50X568HG(M)	50	200	500 ... 2100	74.5	153.4	M33x1.5	G1−A	M33x1.5	G1−A
30MR55X568HG(M)	55	200	500 ... 1750	76.7	157.9	M33x1.5	G1−A	M33x1.5	G1−A
30MR60X568HG(M)	60	180	500 ... 1750	78.7	162.4	M33x1.5	G1−A	M33x1.5	G1−A

Designed as a first section of multiple gear pumps group 33.

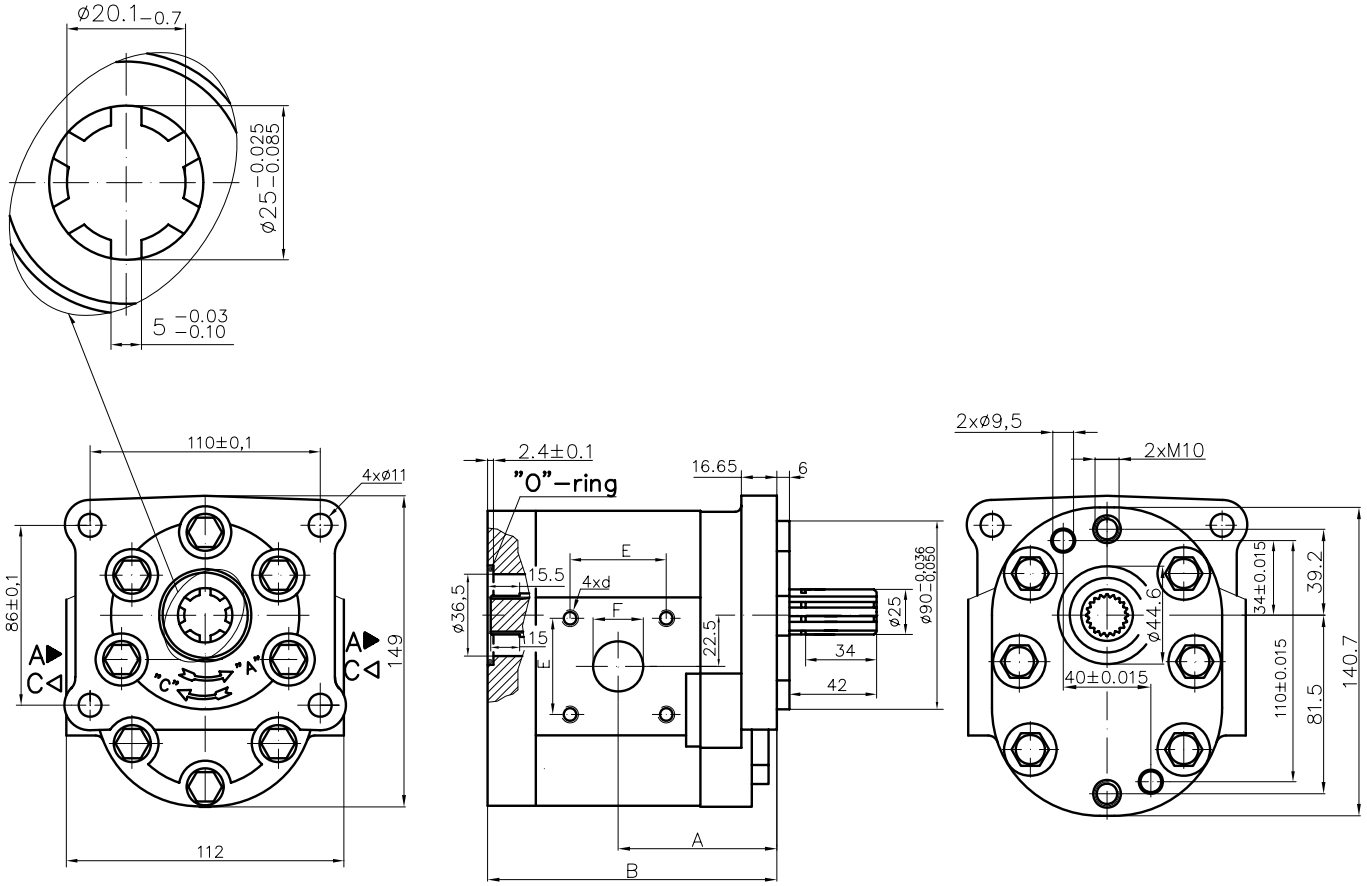

Type	Displacement	Flow		Pressure	max Speed	Dimension							
		at 1500 rpm	at max rpm	P_{nom}	n	A	B	Inlet			Outlet		
	cm^3/rev	l/min	l/min	bar	rpm	mm	mm	E	d	F	E	d	F
30A(C)25X247Y	24,5	34,5	69,1	200	3000	64,0	124,5	46	M8	20	46	M8	20
30A(C)32X247Y	32	45,1	75,2	200	2500	67,6	131,8	46	M8	22	46	M8	22
30A(C)46X247Y	46	65,6	100,5	190	2300	72,5	144,2						
30A(C)50X247Y	50	71,3	99,8	175	2100	72,5	147,8	54	M10	27	54	M10	27

Designed as a second section of multiple gear pumps group 33.

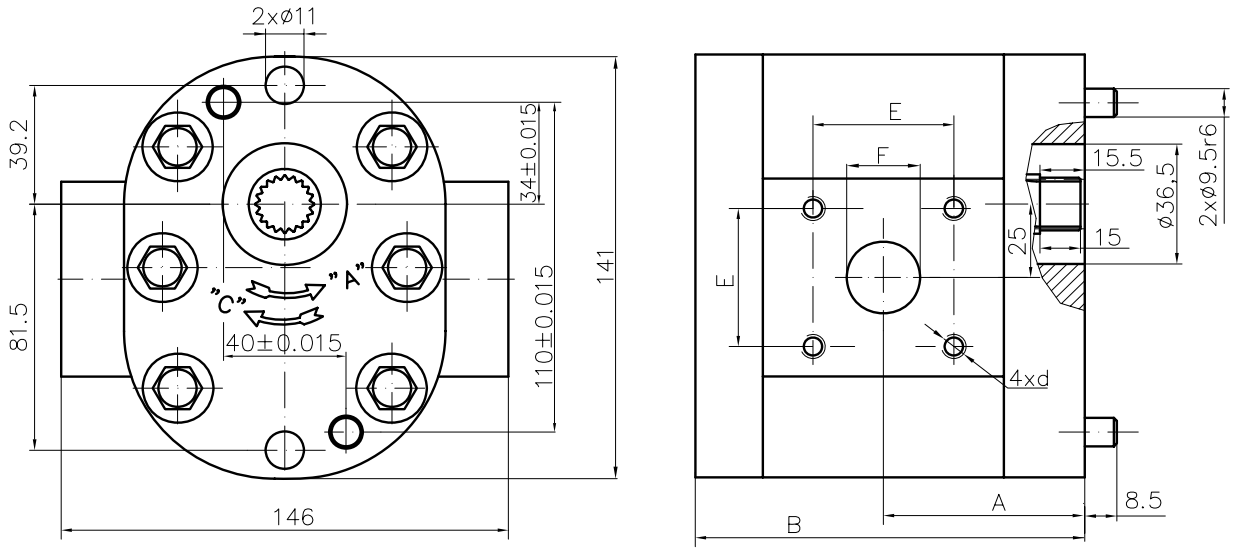

Type	Displacement	Flow		Pressure	max Speed	Dimension							
		at 1500 rpm	at max rpm	P_{nom}	n	A	B	Inlet			Outlet		
	cm^3/rev	l/min	l/min	bar	rpm	mm	mm	E	d	F	E	d	F
30A(C)25X248	24,5	34,5	69,1	200	3000	60,6	118,3	46	M8	19	46	M8	19
30A(C)32X248	32	45,1	75,2	200	2500	64,2	125,5	46	M8	22	46	M8	22
30A(C)32X248H	32	45,1	75,2	200	2500	68,6	134,5						
30A(C)46X248	46	65,6	100,5	190	2300	70,4	138,0	54	M10	27	54	M10	27
30A(C)46X248H	46	65,6	100,5	190	2300	74,9	147,0						
30A(C)50X248	50	71,3	99,8	175	2100	72,2	141,6						
30A(C)50X248H	50	71,3	99,8	175	2100	76,7	150,6						

Used symbols:

q - displacement
p_{nom} - nominal pressure
n_{min} - minimal speed
n_{nom} - nominal speed
n_{max} - maximal speed
P_{nom} - power at p_{nom} and n_{nom}
P_{max} - power at p_{nom} and n_{max}

volumetric efficiencies:

η_{qmin} - at min. speed
η_{qnom} - at nom. speed
η_{qmax} - at max. speed

efficiencies:

η_{min} - at min. speed
η_{nom} - at nom. speed
η_{max} - at max. speed

q	cm^3	20H	22.5H	25H	28H	32 32H	36 36H	42 42H	46H	50H	55H	60H
p_{nom}	bar	200	200	200	200	200	190	190	190	175	175	175
n_{min}	min^{-1}	650	650	650	650	650	650	650	650	650	650	650
n_{nom}	min^{-1}	1500	1500	1500	1500	1500	1500	1500	1500	1500	1500	1500
n_{max}	min^{-1}	2500	2500	2500	2500	2500	2300	2300	2100	2100	1750	1750
η_{qmin}	%	80	80	82	83	83	83	84	84	85	85	85
η_{min}	%	73	73	74	75	75	76	76	77	78	78	78
η_{qnom}	%	94	94	94	94	94	94	95	95	95	95	95
η_{nom}	%	85	85	86	86	86	86	85	85	85	85	85
η_{qmax}	%	93	93	93	94	94	94	94	94	94	94	94
η_{max}	%	83	83	84	84	84	84	84	83	83	83	83
P_{nom}	kW	10.8	12.3	13.5	15.1	18	20	22	26	24.5	29	31.7
P_{max}	kW	18.5	21	22.5	31.5	28.8	30	34	34	39	33	36

Technical data		Технически данни			
Type size Типоразмер		95	120	140	165
Working volume Работен обем	cm^3	43	54.5	63.5	75
Rated pressure Номинално налягане	bar	175	140	140	105
Max. Pressure Максимално налягане	bar	200	170	170	130
Min.speed Мин. честота на въртене	min^{-1}	700	700	700	700
Max.speed Макс. честота на въртене	min^{-1}	2000	2000	2000	2000

variant „X“ (without designation без означения) variant „XT“ (“XTM“)

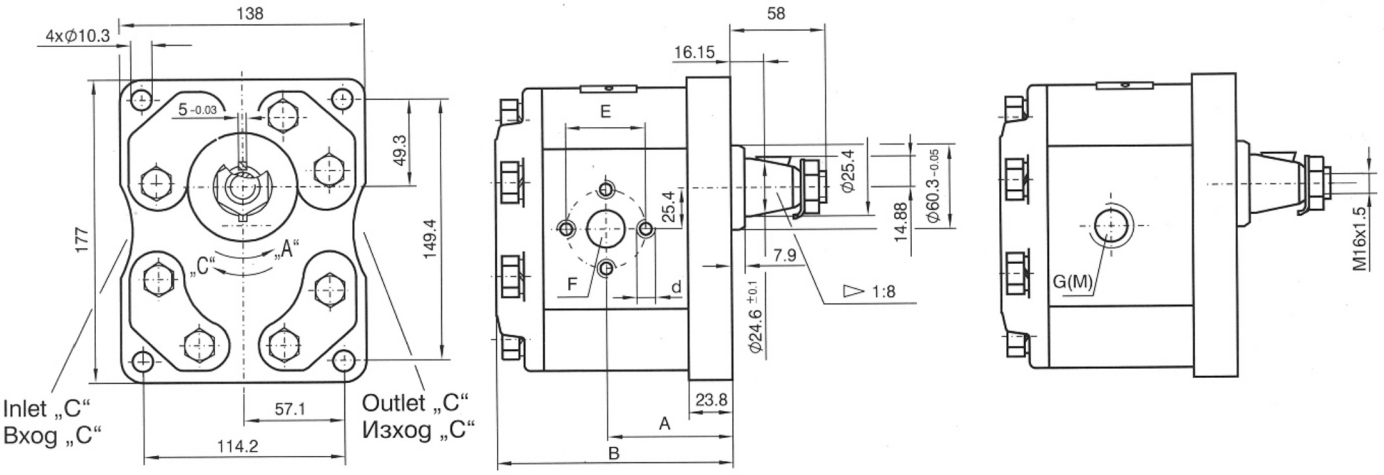

Type Тип	Dimensions Размери [mm]											
			Inlet Вход					Outlet Изход				
						T	TM				T	TM
	A	B	F	d	E	G	M	F	d	E	G	M
A(C)95X…	66	132	27	M10	50.8	G1	M33x1.5	27	M10	50.8	G1	M33x1.5
A(C)120X…	66	132	27	M10	50.8	G1	M33x1.5	27	M10	50.8	G1	M33x1.5
A(C)140X…	72.3	145	33.5	M12	61.9	$G1^{1/4}$	M42x1.5	27	M10	50.8	G1	M33x1.5
A(C)165X…	72.3	145	33.5	M12	61.9	$G1^{1/4}$	M42x1.5	27	M10	50.8	G1	M33x1.5

Technical data		Технически данни			
Type size Типоразмер		170	215	280	325
Working volume Работен обем	cm^3	77	98	127	147
Rated pressure Номинално налягане	bar	175	140	140	105
Max. Pressure Максимално налягане	bar	200	170	170	130
Min.speed Мин. честота на въртене	min^{-1}	700	700	700	700
Max.speed Макс. честота на въртене	min^{-1}	1750	1750	1750	1750

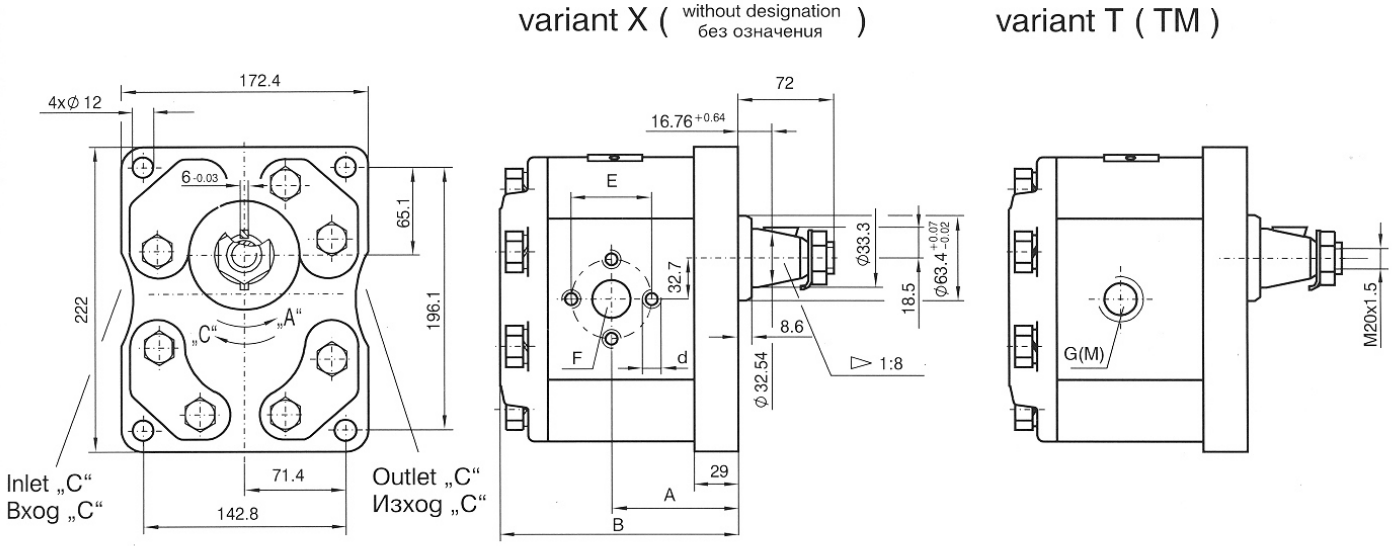

Type Тип	Dimensions Размери [mm]											
			Inlet Вход					Outlet Изход				
						T	TM				T	TM
	A	B	F	d	E	G	M	F	d	E	G	M
A(C) 170X...	79.7	160	38	M12	72.5	G1 1/2	M48X2	32	M12	61.9	G1 1/4	M42X1,5
A(C) 215X...	79.7	160	38	M12	72.5	G1 1/2	M48X2	32	M12	61.9	G1 1/4	M42X1,5
A(C) 280X...	88.9	180	38	M12	72.5	G1 1/2	M48X2	32	M12	61.9	G1 1/4	M42X1,5
A(C) 325X...	88.9	180	38	M12	72.5	G1 1/2	M48X2	32	M12	61.9	G1 1/4	M42X1,5

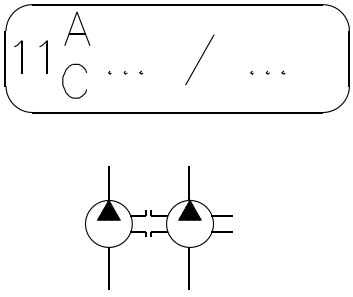

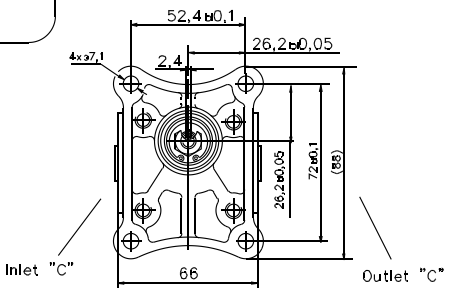

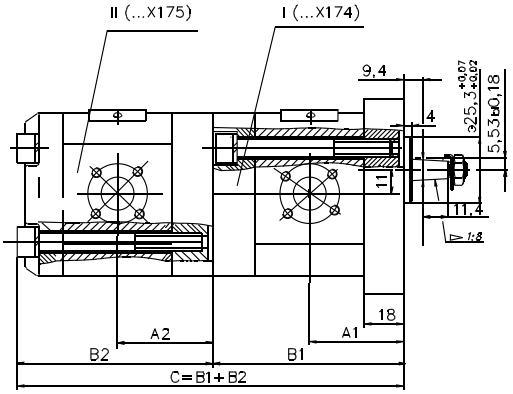

Note: For the supply ports'sizes (input–output) see the schemes of the relevant single pump–type.
For other pumps' combinations contact with the manufacturer.

I		
Type	A1	B1
10A(C)1X174	39,1	79
10A(C)1,25X174	39,5	80
10A(C)1,6X174	40,3	81,6
10A(C)2X174	41,1	83,2
10A(C)2,5X174	42,1	85,2
10A(C)3,15X174	43,5	87,8
10A(C)3,65X174	44,4	89,9
10A(C)4,2X174	45,5	92,1
10A(C)5X174	47,1	95,2
10A(C)5,7X174	48,5	98,1
10A(C)6,1X174	49,4	99,8

II		
Type	A2	B2
10A(C)1X175	39,1	81,0
10A(C)1,25X175	39,5	82,0
10A(C)1,6X175	40,3	83,6
10A(C)2X175	41,1	85,2
10A(C)2,5X175	42,1	87,2
10A(C)3,15X175	43,5	89,8
10A(C)3,65X175	44,4	91,8
10A(C)4,2X175	45,5	94,1
10A(C)5X175	47,1	97,2
10A(C)5,7X175	48,5	100,1
10A(C)6,1X175	49,4	101,8

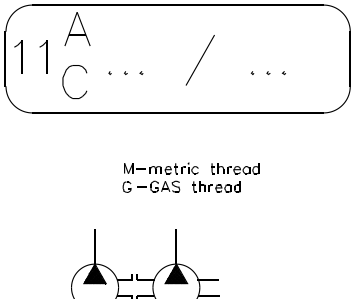

M–metric thread
G–GAS thread

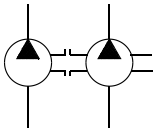

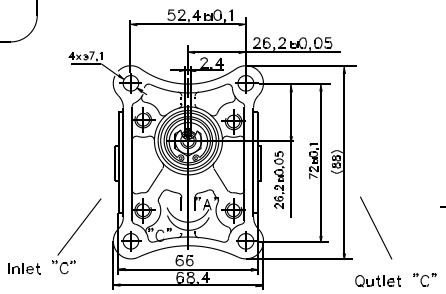

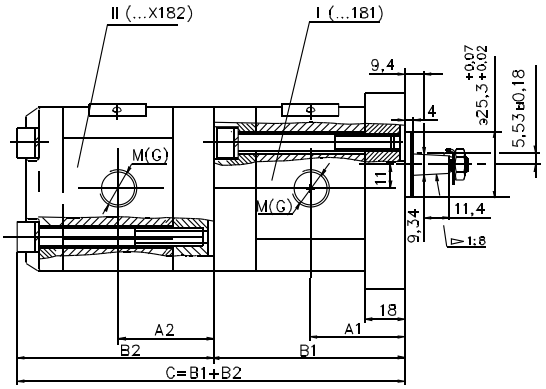

Note: For the supply ports'sizes (input–output) see the schemes of the relevant single pump–type.
For other pumps' combinations contact with the manufacturer.

I		
Type	A1	B1
10A(C)1X181...	39,1	79
10A(C)1,25X181...	39,5	80
10A(C)1,6X181...	40,3	81,6
10A(C)2X181...	41,1	83,2
10A(C)2,5X181...	42,1	85,2
10A(C)3,15X181...	43,5	87,8
10A(C)3,65X181...	44,4	89,8
10A(C)4,2X181...	45,5	92,1
10A(C)5X181...	47,1	95,2
10A(C)5,7X181...	48,5	98,1
10A(C)6,1X181...	49,4	99,8

II		
Type	A2	B2
10A(C)1X182...	39,1	81,0
10A(C)1,25X182...	39,5	82,0
10A(C)1,6X182...	40,3	83,6
10A(C)2X182...	41,1	85,2
10A(C)2,5X182...	42,1	87,2
10A(C)3,15X182...	43,5	89,8
10A(C)3,65X182...	44,4	91,8
10A(C)4,2X182...	45,5	94,1
10A(C)5X182...	47,1	97,2
10A(C)5,7X182...	48,5	100,1
10A(C)6,1X182...	49,4	101,8

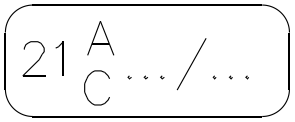

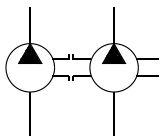

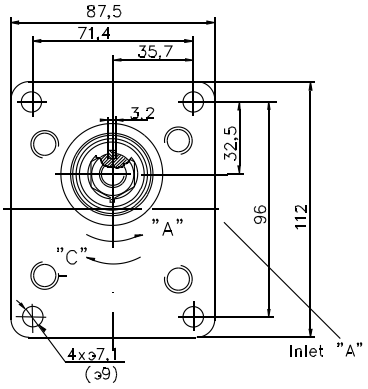

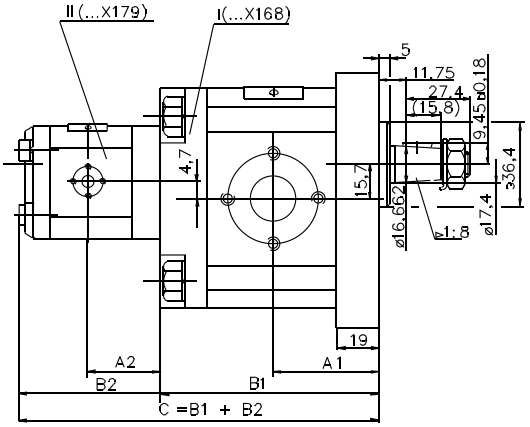

Note: For the supply ports'sizes (input–output) see the schemes of the relevant single pump–type.
For other pumps' combinations contact with the manufacturer.

I		
Type	A1	B1
20A(C)4,5X168	42,5	89,7
20A(C)6,3X168	44	92,7
20A(C)8,2X168	45,5	95,6
20A(C)10X168	47	98,7
20A(C)11X168	48	100,7
20A(C)12X168	48,6	102
20A(C)14X168	50	105,1
20A(C)15X168	51	106,6
20A(C)16X168	52	108,3
20A(C)19X168	54,3	113,2
20A(C)22X168	56,8	118,2
20A(C)25X168	59,2	123,1

II		
Type	A2	B2
10A(C)1X179	39,1	81
10A(C)1,25X179	39,5	82
10A(C)1,6X179	40,3	83,6
10A(C)2X179	41,1	85,2
10A(C)2,5X179	42,10	87,2
10A(C)3,15X179	43,5	89,8
10A(C)3,65X179	44,4	91,85
10A(C)4,2X179	45,5	94,1
10A(C)5X179	47,1	97,2
10A(C)5,7X179	48,5	100,1
10A(C)6,1X179	49,4	101,8

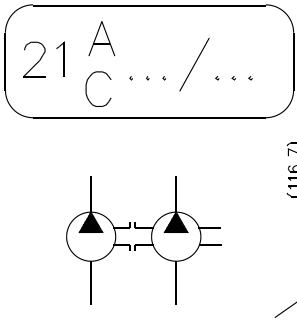

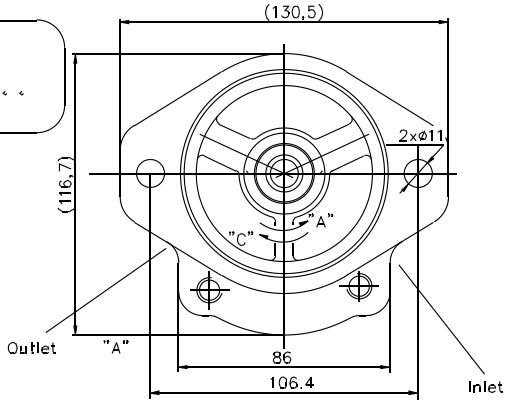

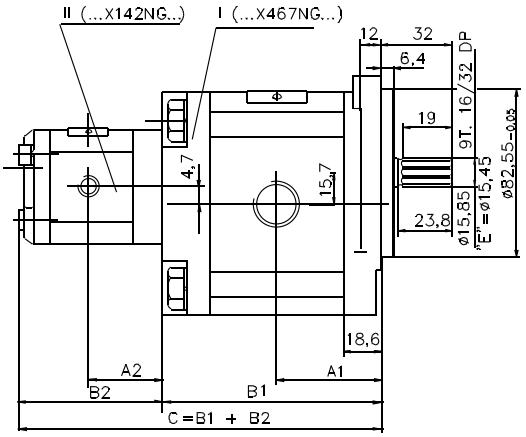

Note: For the supply ports'sizes (input–output) see the schemes of the relevant single pump–type.
For other pumps' combinations contact with the manufacturer.

I		
Type	A1	B1
20A(C)4,5X467NG...	42,1	89,3
20A(C)6,3X467NG...	42,1	89,3
20A(C)8,2X467NG...	42,1	89,3
20A(C)10X467NG...	46,6	98,3
20A(C)11X467NG...	47,6	100,3
20A(C)12X467NG...	48,2	101,6
20A(C)14X467NG...	49,6	104,7
20A(C)15X467NG...	50,6	106,2
20A(C)16X467NG...	51,6	107,8
20A(C)19X467NG...	53,6	112,8
20A(C)22X467NG...	56,6	117,8
20A(C)25X467NG...	58,8	122,7

II		
Type	A2	B2
10A(C)1X142NG...	39,1	81
10A(C)1,25X142NG...	39,5	82
10A(C)1,6X142NG...	40,3	83,6
10A(C)2X142NG...	41,1	85,2
10A(C)2,5X142NG...	42,10	87,2
10A(C)3,15X142NG...	43,5	89,8
10A(C)3,65X142NG..	44,4	91,85
10A(C)4,2X142NG...	45,5	94,1
10A(C)5X142NG...	47,1	97,2
10A(C)5,7X142NG...	48,5	100,1
10A(C)6,1X142NG...	49,4	101,8

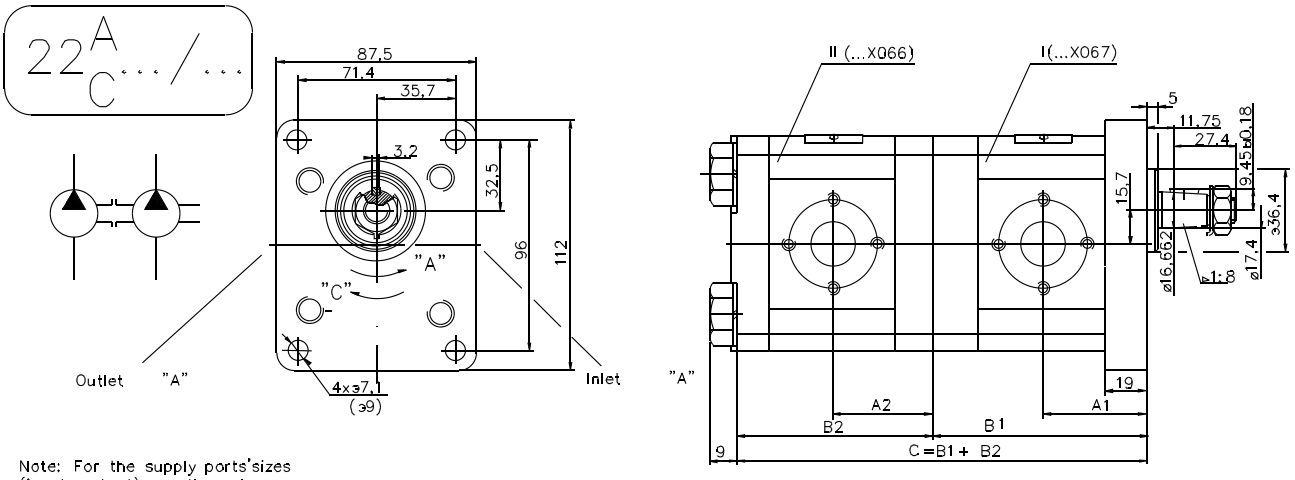

Note: For the supply ports'sizes (input–output) see the schemes of the relevant single pump–type.
For other pumps' combinations contact with the manufacturer.

I		
Type	A1	B1
20A(C)4,5X067	42,5	87,2
20A(C)6,3X067	44	90,2
20A(C)8,2X067	45,5	93,1
20A(C)10X067	47	96,2
20A(C)11X067	48	98,2
20A(C)12X067	48,6	99,5
20A(C)14X067	50	102,6
20A(C)15X067	51	104,1
20A(C)16X067	52	105,8
20A(C)19X067	54,3	110,7
20A(C)22X067	56,8	115,7
20A(C)25X067	59,2	120,6

II		
Type	A2	B2
20A(C)4,5X066	40,5	78
20A(C)6,3X066	42	81
20A(C)8,2X066	43,5	83,9
20A(C)10X066	45	87
20A(C)11X066	46	89
20A(C)12X066	46,6	90,3
20A(C)14X066	48	93,4
20A(C)15X066	49	94,9
20A(C)16X066	50	96,5
20A(C)19X066	52	101,5
20A(C)22X066	55	106,5
20A(C)25X066	57,2	111,4

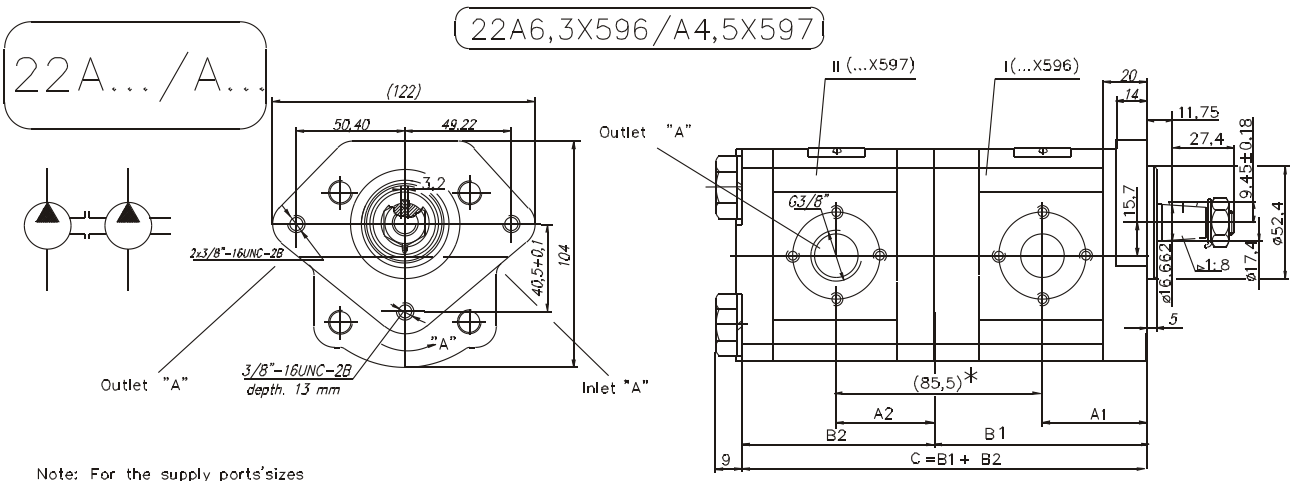

Note: For the supply ports'sizes (input–output) see the schemes of the relevant single pump–type.
For other pumps' combinations contact with the manufacturer.

I			
	Type	A1	B1
	20A4,5X596	43,5	88,2
*	20A6,3X596	45	91,2
	20A8,2X596	46,5	94,1
	20A10X596	48	97,2
	20A11X596	49	99,2
	20A12X596	49,6	100,5
	20A14X596	51	103,6
	20A15X596	52	105,1
	20A16X596	53	106,8
	20A19X596	55	111,7
	20A22X596	58	116,7
	20A25X596	60,2	121,6

II			
	Type	A2	B2
*	20A4,5X597A	39,3	78

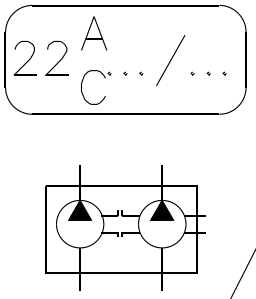

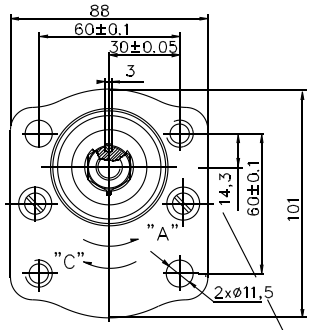

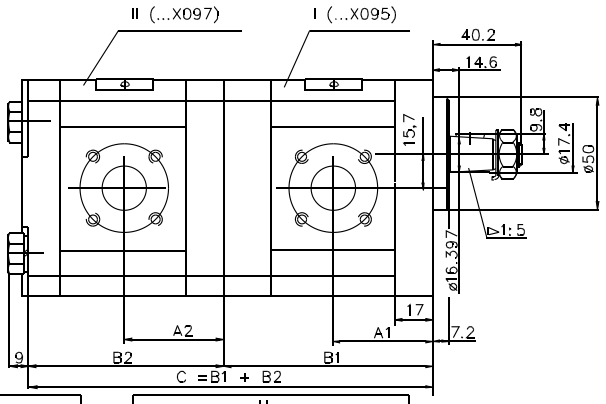

Note: For the supply ports'sizes (input–output) see the schemes of the relevant single pump–type.
For other pumps' combinations contact with the manufacturer.

I		
Type	A1	B1
20A(C)4,5X095	40,5	85,2
20A(C)6,3X095	42	88,2
20A(C)8,2X095	43,5	91,1
20A(C)10X095	45	94,2
20A(C)11X095	46	96,2
20A(C)12X095	46,6	97,5
20A(C)14X095	48	100,6
20A(C)15X095	49	102,1
20A(C)16X095	50	103,8
20A(C)19X095	52	108,7
20A(C)22X095	53	113,7
20A(C)25X095	57,2	118,6
20A(C)16X095A	45	103,8
20A(C)19X095A	45	108,7

II		
Type	A2	B2
20A(C)4.5X097	40,5	78
20A(C)6,3X097	42	81
20A(C)8,2X097	43,5	83,9
20A(C)10X097	45	87
20A(C)11X097	46	89
20A(C)12X097	46,6	90,3
20A(C)14X097	48	93,4
20A(C)17X097	49	94,9
20A(C)16X097	50	96,5
20A(C)19X097	52	101,5
20A(C)22X097	55	106,5
20A(C)25X097	57,2	111,4
20A(C)11X097A	42,4	89
20A(C)16X097A	45	96,5
20A(C)11X097A1	37,5	89
20A(C)14X097A	55,3	93,4
20A(C)14X097A1	42,9	93,4

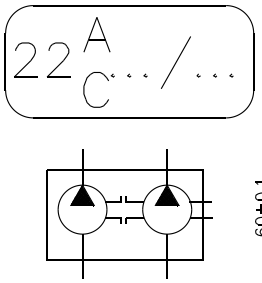

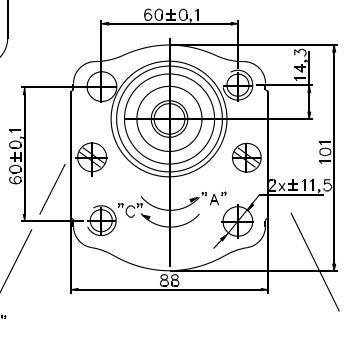

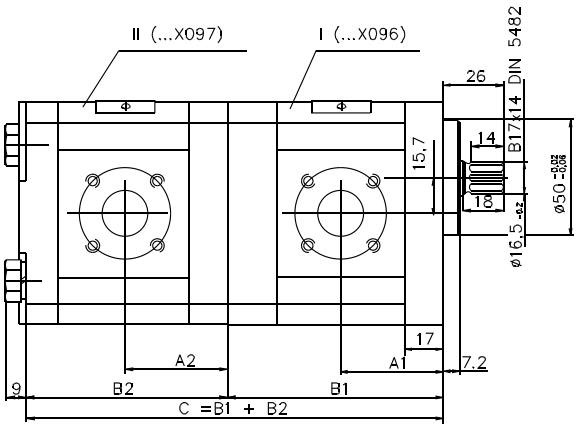

Note: For the supply ports'sizes (input–output) see the schemes of the relevant single pump–type.
For other pumps' combinations contact with the manufacturer.

I		
Type	A1	B1
20A(C)4,5X096	40,5	85,2
20A(C)6,3X096	42	88,2
20A(C)8,2X096	43,5	91,1
20A(C)10X096	45	94,2
20A(C)11X096	46	96,2
20A(C)12X096	46,6	97,5
20A(C)14X096	48	100,6
20A(C)15X096	49	102,1
20A(C)16X096	50	103,8
20A(C)19X096	52	108,7
20A(C)22X096	55	113,7
20A(C)25X096	57,2	118,6
20A(C)22X096A	58,5	113,7

II		
Type	A2	B2
20A(C)4.5X097	40,5	78
20A(C)6,3X097	42	81
20A(C)8,2X097	43,5	83,9
20A(C)10X097	45	87
20A(C)11X097	46	89
20A(C)12X097	46,6	90,3
20A(C)14X097	48	93,4
20A(C)17X097	49	94,9
20A(C)16X097	50	96,5
20A(C)19X097	52	101,5
20A(C)22X097	55	106,5
20A(C)25X097	57,2	111,4
20A(C)11X097A	42,4	89
20A(C)16X097A	45	96,5
20A(C)11X097A1	37,5	89
20A(C)14X097A	55,3	93,4
20A(C)14X097A1	42,9	93,4

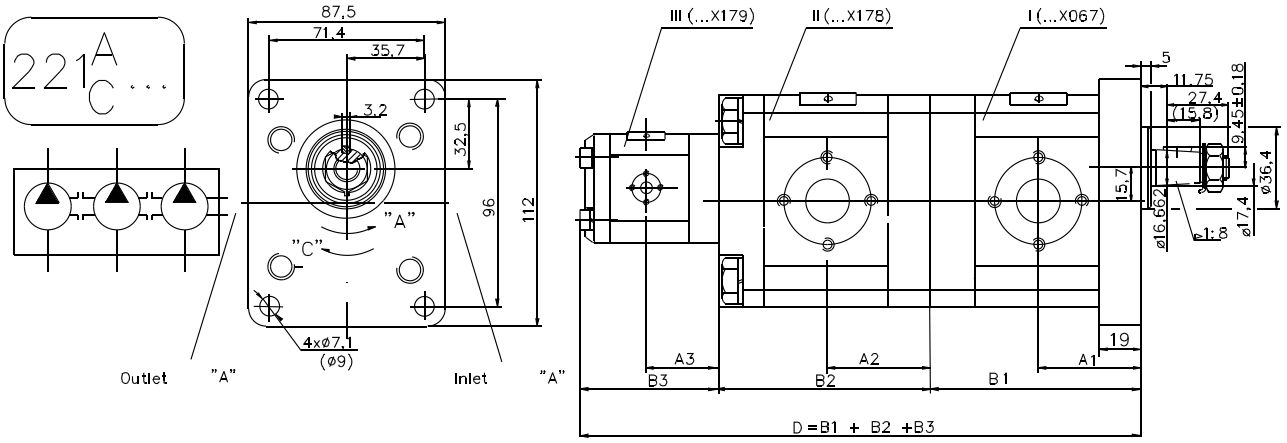

Note: For the supply ports'sizes (input–output) see the schemes of the relevant single pump–type.
For other pumps' combinations contact with the manufacturer.

I		
Type Typ Tun	A1	B1
20A(C)4,5X067	42,5	87,2
20A(C)6,3X067	44	90,2
20A(C)8,2X067	45,5	93,1
20A(C)10X067	47	96,2
20A(C)11X067	48	98,2
20A(C)12X067	48,6	99,5
20A(C)14X067	50	102,6
20A(C)15X067	51	104,1
20A(C)16X067	52	105,8
20A(C)19X067	54,3	110,7
20A(C)22X067	56,8	115,7
20A(C)25X067	59,2	120,6

II		
Type Typ Tun	A2	B2
20A(C)4,5X178	40,5	87,7
20A(C)6,3X178	42	90.7
20A(C)8,2X178	43,5	93,6
20A(C)10X178	45	96,7
20A(C)11X178	46	98,7
20A(C)12X178	46,6	100
20A(C)14X178	48	103,1
20A(C)15X178	49	104,6
20A(C)16X178	50	106,3
20A(C)19X178	52	111,2
20A(C)22X178	55	116,3
20A(C)25X178	57,2	121,1

III		
Type Typ Tun	A3	B3
10A(C)1X179	39,1	81,0
10A(C)1,25X179	39,5	82,0
10A(C)1,6X179	40,3	83,6
2A(C)2X179	41,1	85,2
10A(C)2,5X179	42,1	87,2
10A(C)3,15X179	43,5	89,8
10A(C)3,65X179	44,4	91,85
10A(C)4,2X179	45,5	94,1
10A(C)5X179	47,1	97,2
10A(C)5,7X179	48,5	100,1
10A(C)6,1X179	49,4	101,8

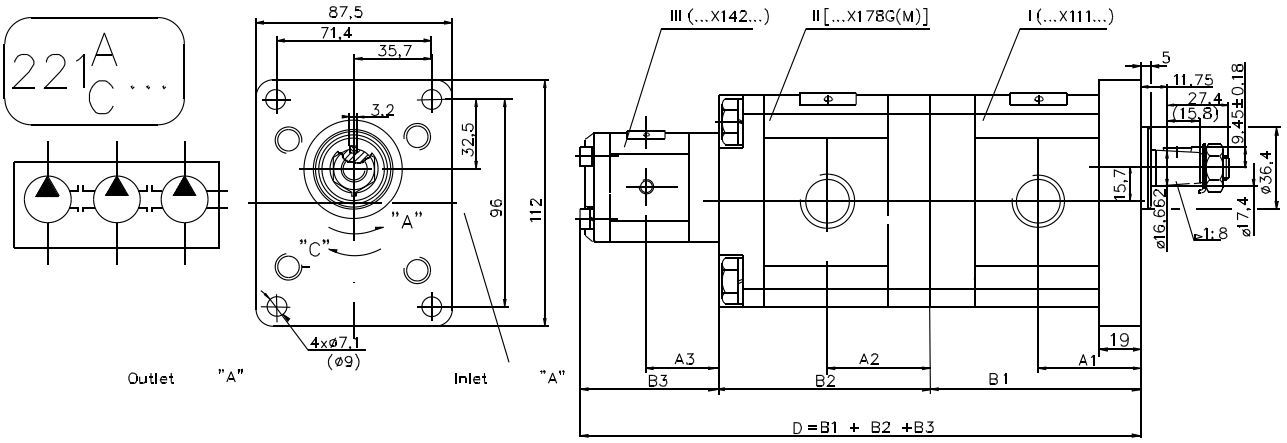

Note: For the supply ports'sizes (input–output) see the schemes of the relevant single pump–type.
For other pumps' combinations contact with the manufacturer.

I		
Type Typ Tun	A1	B1
20A(C)4,5X111...	42,5	87,2
20A(C)6,3X111...	44	90,2
20A(C)8,2X111...	45,5	93,1
20A(C)10X111...	47	96,2
20A(C)11X111...	48	98,2
20A(C)12X111...	48,6	99,5
20A(C)14X111...	50	102,6
20A(C)15X111...	51	104,1
20A(C)16X111...	52	105,8
20A(C)19X111...	54,3	110,7
20A(C)22X111...	56,8	115,7
20A(C)25X111...	59,2	120,6

II		
Type Typ Tun	A2	B2
20A(C)4,5X178...	40,5	87,7
20A(C)6,3X178...	42	90,7
20A(C)8,2X178...	43,5	93,6
20A(C)10X178...	45	96,7
20A(C)11X178...	46	98,7
20A(C)12X178...	46,6	100
20A(C)14X178...	48	103,1
20A(C)15X178...	49	104,6
20A(C)16X178...	50	106,3
20A(C)19X178...	52	111,2
20A(C)22X178...	55	116,3
20A(C)25X178...	57,2	121,1

III		
Type Typ Tun	A3	B3
10A(C)1X142...	39,1	81,0
10A(C)1,25X142...	39,5	82,0
10A(C)1,6X142...	40,3	83,6
2A(C)2X142...	41,1	85,2
10A(C)2,5X142...	42,1	87,2
10A(C)3,15X142...	43,5	89,8
10A(C)3,65X142...	44,4	91,85
10A(C)4,2X142...	45,5	94,1
10A(C)5X142...	47,1	97,2
10A(C)5,7X142...	48,5	100,1
10A(C)6,1X142...	49,4	101,8

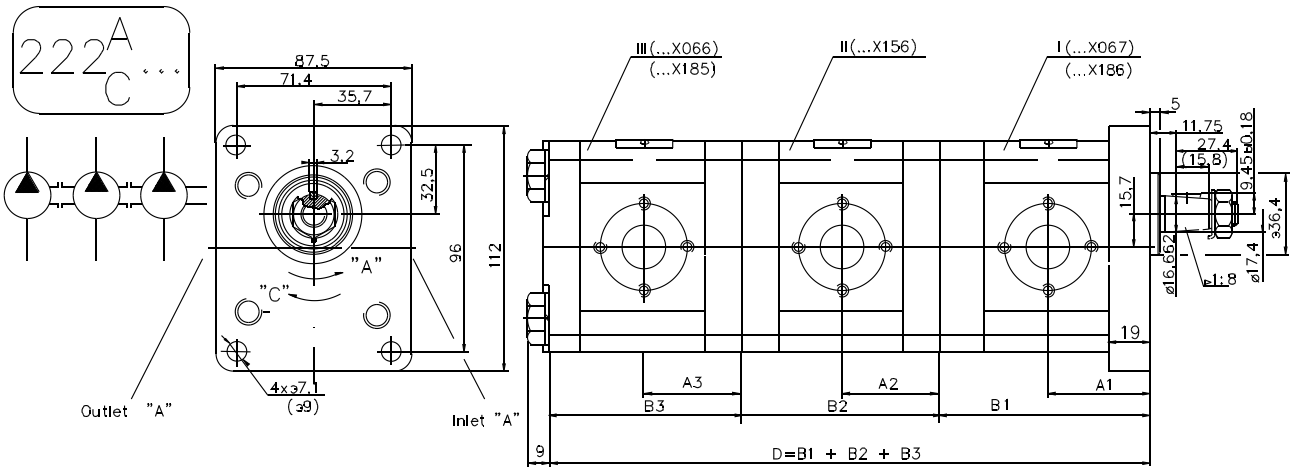

Note: For the supply ports'sizes (input–output) see the schemes of the relevant single pump–type.
For other pumps' combinations contact with the manufacturer.

I		
Type Typ Tun	A1	B1
20A(C)4,5X067	42,5	87,2
20A(C)6,3X067	44	90,2
20A(C)8,2X067	45,5	93,1
20A(C)10X067	47	96,2
20A(C)11X067	48	98,2
20A(C)12X067	48,6	99,5
20A(C)14X067	50	102,6
20A(C)15X067	51	104,1
20A(C)16X067	52	105,8
20A(C)19X067	54,3	110,7
20A(C)22X067	56,8	115,7
20A(C)25X067	59,2	120,6

II		
Type Typ Tun	A2	B2
20A(C)4,5X156	40,5	85,2
20A(C)6,3X156	42	88,2
20A(C)8,2X156	43,5	91,1
20A(C)10X156	45	94,2
20A(C)11X156	46	96,2
20A(C)12X156	46,6	97,5
20A(C)14X156	48	100,6
20A(C)17X156	49	102,1
20A(C)16X156	50	103,8
20A(C)19X156	52	108,7
20A(C)22X156	55	113,7
20A(C)25X156	57,2	118,6

III		
Type Typ Tun	A3	B3
20A(C)4,5X066	40,5	78
20A(C)6,3X066	42	81
20A(C)8,2X066	43,5	83,9
20A(C)10X066	45	87
20A(C)11X066	46	89
20A(C)12X066	46,6	90,3
20A(C)14X066	48	93,4
20A(C)15X066	49	94,9
20A(C)16X066	50	96,5
20A(C)19X066	52	101,5
20A(C)22X066	55	106,5
20A(C)25X066	57,2	111,4

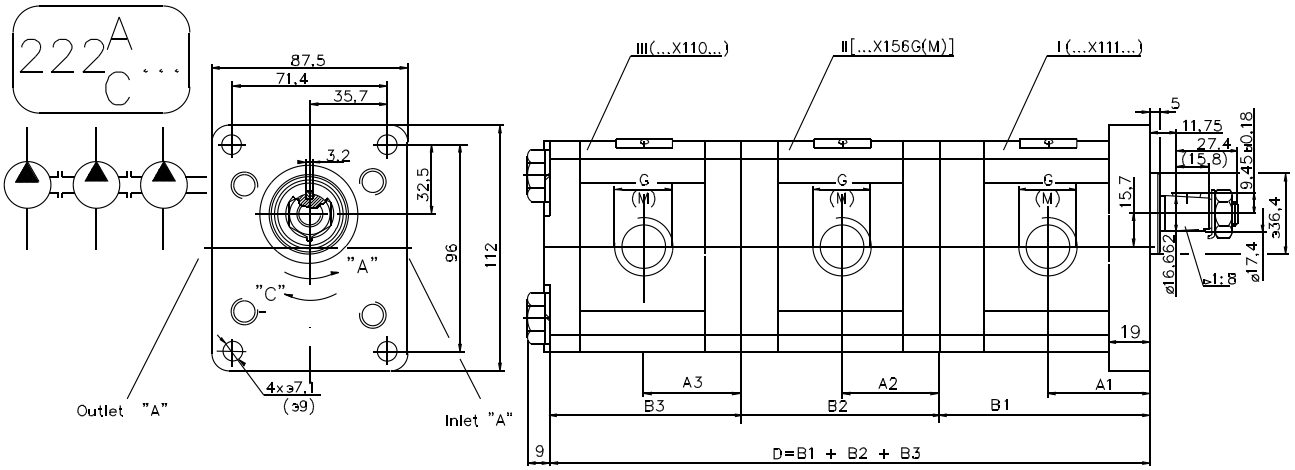

Note: For the supply ports'sizes (input–output) see the schemes of the relevant single pump–type.
For other pumps' combinations contact with the manufacturer.

I		
Type Typ Tun	A1	B1
20A(C)4,5X111...	42,5	87,2
20A(C)6,3X111...	44	90,2
20A(C)8,2X111...	45,5	93,1
20A(C)10X111...	47	96,2
20A(C)11X111...	48	98,2
20A(C)12X111...	48,6	99,5
20A(C)14X111...	50	102,6
20A(C)15X111...	51	104,1
20A(C)16X111...	52	105,8
20A(C)19X111...	54,3	110,7
20A(C)22X111...	56,8	115,7
20A(C)25X111...	59,2	120,6

II		
Type Typ Tun	A2	B2
20A(C)4,5X156...	40,5	85,2
20A(C)6,3X156...	42	88,2
20A(C)8,2X156...	43,5	91,1
20A(C)10X156...	45	94,2
20A(C)11X156...	46	96,2
20A(C)12X156...	46,6	97,5
20A(C)14X156...	48	100,6
20A(C)17X156...	49	102,1
20A(C)16X156...	50	103,8
20A(C)19X156...	52	108,7
20A(C)22X156...	55	113,7
20A(C)25X156...	57,2	118,6

III		
Type Typ Tun	A3	B3
20A(C)4,5X110...	40,5	78
20A(C)6,3X110...	42	81
20A(C)8,2X110...	43,5	83,9
20A(C)10X110...	45	87
20A(C)11X110...	46	89
20A(C)12X110...	46,6	90,3
20A(C)14X110...	48	93,4
20A(C)15X110...	49	94,9
20A(C)16X110...	50	96,6
20A(C)19X110...	52	101,5
20A(C)22X110...	55	106,5
20A(C)25X110...	57,2	111,4

Gr. 32 200 bar

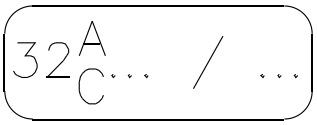

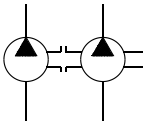

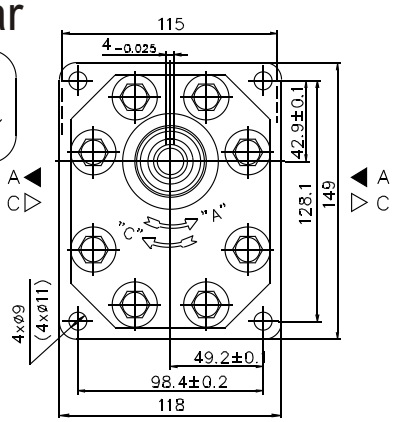

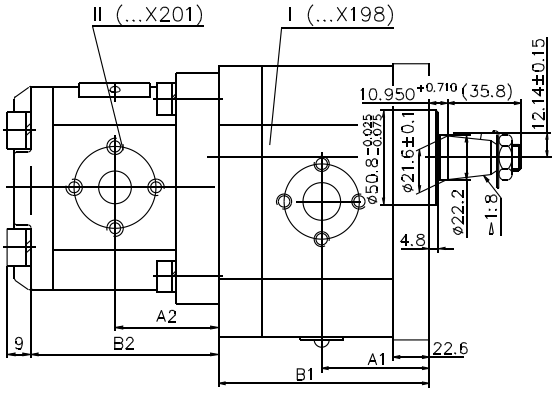

Note: For the supply ports' sises (input-output) see the schemes of the relevant single pump-type. For other pumps' combinations contact with the manufacturer.

I		
Type Typ Tun	A1	B1
	mm	
30A(C)20X198H	56.1	114.7
30A(C)22.5X198H	57.6	117.7
30A(C)25X198H	58.3	119.1
30A(C)28X198H	60.2	122.7
30A(C)32X198	62	126.3
30A(C)32X198H	66.5	135.3
30A(C)36X198	63.5	129.4
30A(C)36X198H	68	138.5
30A(C)42X198	66.3	135
30A(C)42X198H	70.8	144.1
30A(C)46X198H	72.7	147.8
30A(C)50X198H	74.5	151.4
30A(C)55X198H	76.7	155.9
30A(C)60X198H	78.7	160.4

II		
Type Typ Tun	A2	B2
	mm	
20A(C)4.5X201	40.5	78
20A(C)6.3X201	42	81
20A(C)8.2X201	43.5	83.9
20A(C)10X201	45	87
20A(C)11X201	46	89.1
20A(C)12X201	46.6	90.3
20A(C)14X201	48	93.4
20A(C)15X201	49	95
20A(C)16X201	50	96.6
20A(C)19X201	52	101.5
20A(C)22X201	55	101.5
20A(C)25X201	57.7	104.5

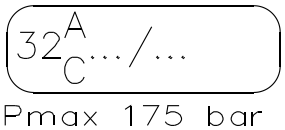

Pmax 175 bar

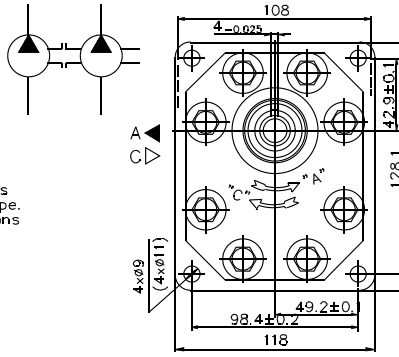

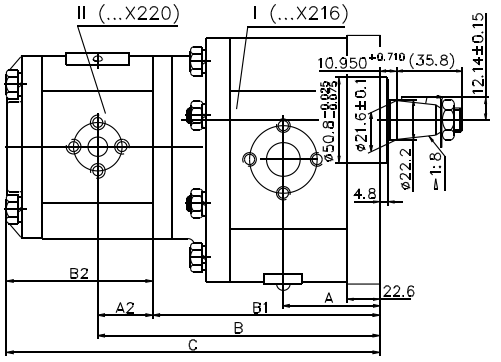

Note: For the supply ports' sises (input-output) see the schemes of the relevant single pump-type. For other pumps' combinations contact with the manufacturer.

I										Note
Type	Displacement	A	B1	Inlet			Outlet			Equivalent Plessey
				E	d	F	E	d	F	
	cm³	mm								
30A(C)20X216H	20	56.1	139.8	40	M8	19	40	M8	19	43X
30A(C)22.5X216H	22.5	57.6	142.9	40	M8	19	40	M8	19	50X
30A(C)25X216H	25	58.3	144.3	40	M8	19	40	M8	19	54X
30A(C)28X216H	28	60.2	147.9	40	M8	19	40	M8	19	54X
30A(C)32X216	32	62	151.3	51	M10	27	40	M8	19	72X
30A(C)32X216H	32	66.5	160.3	51	M10	27	40	M8	19	72X
30A(C)36X216	36	63.5	154.4	51	M10	27	40	M8	19	80X
30A(C)36X216H	36	68	163.4	51	M10	27	40	M8	19	80X
30A(C)42X216	42	66.3	160	51	M10	27	40	M8	19	94X
30A(C)42X216H	42	70.8	169	51	M10	27	40	M8	19	94X
30A(C)46X216H	46	72.7	172.8	51	M10	27	40	M8	19	101X
30A(C)50X216H	50	74.5	176.4	51	M10	27	40	M8	19	111X
30A(C)55X216H	55	76.7	180.9	51	M10	27	40	M8	19	121X
30A(C)60X216H	60	78.7	185.5	51	M10	27	40	M8	19	

B = B1 + A2
C = B1 + B2

II			Note
Type Typ Tun	A2	B2	Equivalent Plessey
	mm		
4.5A(C)4.5X220	23.5	61.7	10X
20A(C)6.3X220	23.5	61.7	14X
20A(C)8.2X220	23.5	61.7	18X
20A(C)10X220	28	70.7	22X
20A(C)11X220	29	72.8	25X
20A(C)12X220	29.5	74	26X
20A(C)14X220	31.2	77.1	31X
20A(C)15X220	32	78.6	33X
20A(C)16X220	32.8	80.3	35X
20A(C)19X220	35.2	85.2	42X
20A(C)22X220	37.8	90.2	48X
20A(C)25X220	40.2	95.1	55X

Gr. 33 250 bar

33 A/C .../...

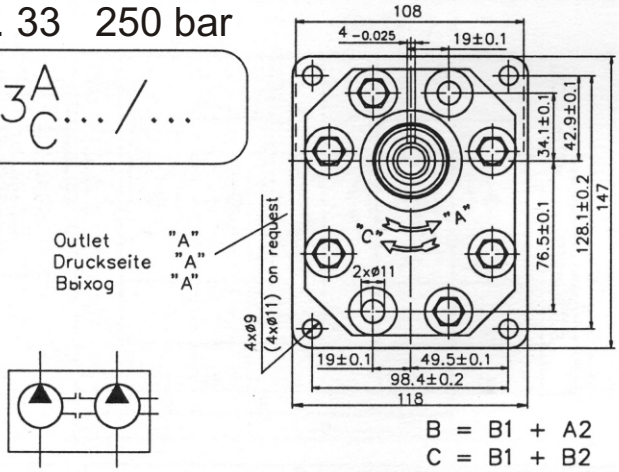

Outlet "A"
Druckseite "A"
Выхоg "A"

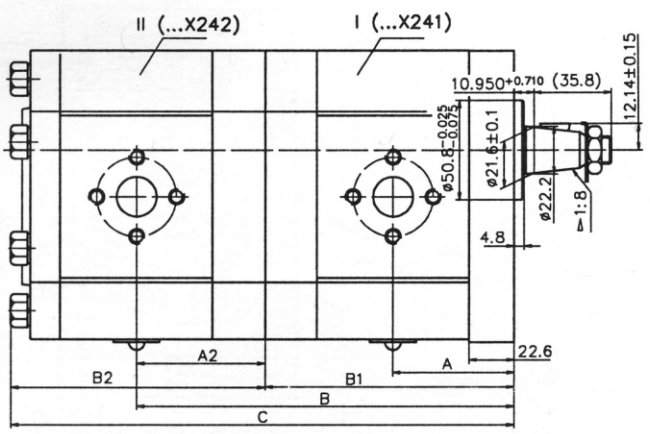

B = B1 + A2
C = B1 + B2

Note: For the supply ports' sises (input–output) see the schemes of the relevant single pump–type. For other pumps' combinations contact with the manufacturer.

Bemerkung: Fuer die Abmessungen der Speisebohrungen (Druck–und Saug–seite) – sieh Schema des entsprech–enden Einzelpumpentypes. Fuer andere Pumpenkombination bitte Rucksprache mit der Herstelller.

Примечание: Размеры питательных отверстии (вхоg–выхоg) выполня–ется в соответствии с чертежей одинарных насосов составляющие комбинацию.

I			Note
Type Typ Tun	A1	B1	Equivalent Plessey
	mm		
30A(C)20X241H	56.1	114.5	43X
30A(C)22.5X241H	57.6	117.5	50X
30A(C)25X241H	58.3	118.9	54X
30A(C)28X241H	60.2	122.5	54X
30A(C)32X241	62	126.1	72X
30A(C)32X241H	66.5	135.1	72X
30A(C)36X241	63.5	129.2	80X
30A(C)36X241H	68	138.3	80X
30A(C)42X241	66.3	134.8	94X
30A(C)42X241H	70.8	143.9	94X
30A(C)46X241H	72.7	147.6	101X
30A(C)50X241H	74.5	151.2	111X
30A(C)55X241H	76.7	155.7	121X
30A(C)60X241H	78.7	160.2	

II			Note
Type Typ Tun	A2	B2	Equivalent Plessey
	mm		
30A(C)20X242H	58.3	118.9	43X
30A(C)22.5X242H	59.7	121.9	50X
30A(C)25X242H	60.5	123.3	54X
30A(C)28X242H	62.4	126.9	54X
30A(C)32X242	64.2	130.5	72X
30A(C)32X242H	68.7	139.5	72X
30A(C)36X242	65.7	133.6	80X
30A(C)36X242H	70.2	142.7	80X
30A(C)42X242	68.5	139.2	94X
30A(C)42X242H	73	148.3	94X
30A(C)46X242H	74.9	152	101X
30A(C)50X242H	76.7	155.6	111X
30A(C)55X242H	78.9	160.1	121X
30A(C)60X242H	80.9	164.6	

Gr. 33 200 bar

33 A/C .../...

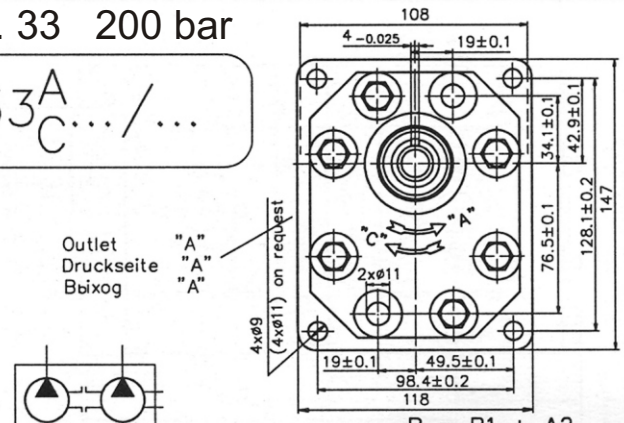

Outlet "A"
Druckseite "A"
Выхоg "A"

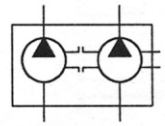

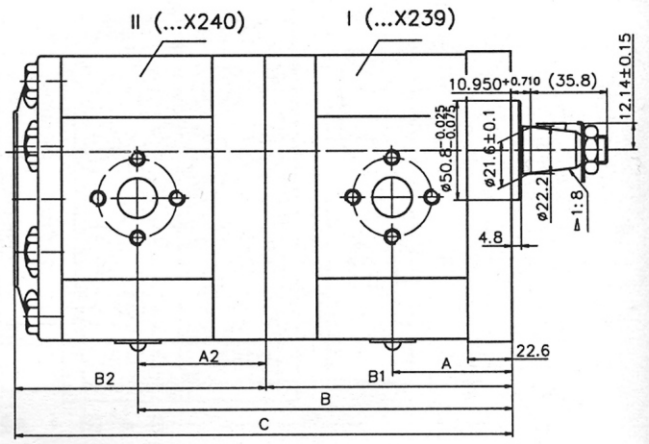

B = B1 + A2
C = B1 + B2

Note: For the supply ports' sises (input–output) see the schemes of the relevant single pump–type. For other pumps' combinations contact with the manufacturer.

Bemerkung: Fuer die Abmessungen der Speisebohrungen (Druck–und Saug–seite) – sieh Schema des entsprech–enden Einzelpumpentypes. Fuer andere Pumpenkombination bitte Rucksprache mit der Herstelller.

Примечание: Размеры питательных отверстии (вхоg–выхоg) выполня–ется в соответствии с чертежей одинарных насосов составляющие комбинацию.

I			Note
Type Typ Tun	A1	B1	Equivalent Plessey
	mm		
30A(C)20X239H	56.1	114.5	43X
30A(C)22.5X239H	57.6	117.5	50X
30A(C)25X239H	58.3	118.9	54X
30A(C)28X239H	60.2	122.5	54X
30A(C)32X239	62	126.1	72X
30A(C)32X239H	66.5	135.1	72X
30A(C)36X239	63.5	129.2	80X
30A(C)36X239H	68	138.3	80X
30A(C)42X239	66.3	134.8	94X
30A(C)42X239H	70.8	143.9	94X
30A(C)46X239H	72.7	147.6	101X
30A(C)50X239H	74.5	151.2	111X
30A(C)55X239H	76.7	155.7	121X
30A(C)60X239H	78.7	160.2	

II			Note
Type Typ Tun	A2	B2	Equivalent Plessey
	mm		
30A(C)20X240H	58.3	118.9	43X
30A(C)22.5X240H	59.7	121.9	50X
30A(C)25X240H	60.5	123.3	54X
30A(C)28X240H	62.4	126.9	54X
30A(C)32X240	64.2	130.5	72X
30A(C)32X240H	68.7	139.5	72X
30A(C)36X240	65.7	133.6	80X
30A(C)36X240H	70.2	142.7	80X
30A(C)42X240	68.5	139.2	94X
30A(C)42X240H	73	148.3	94X
30A(C)46X240H	74.9	152	101X
30A(C)50X240H	76.7	155.6	111X
30A(C)55X240H	78.9	160.1	121X
30A(C)60X240H	80.9	164.6	

A(C)95...165X...1/ A(C)95...165X...1

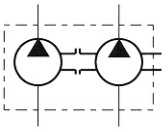

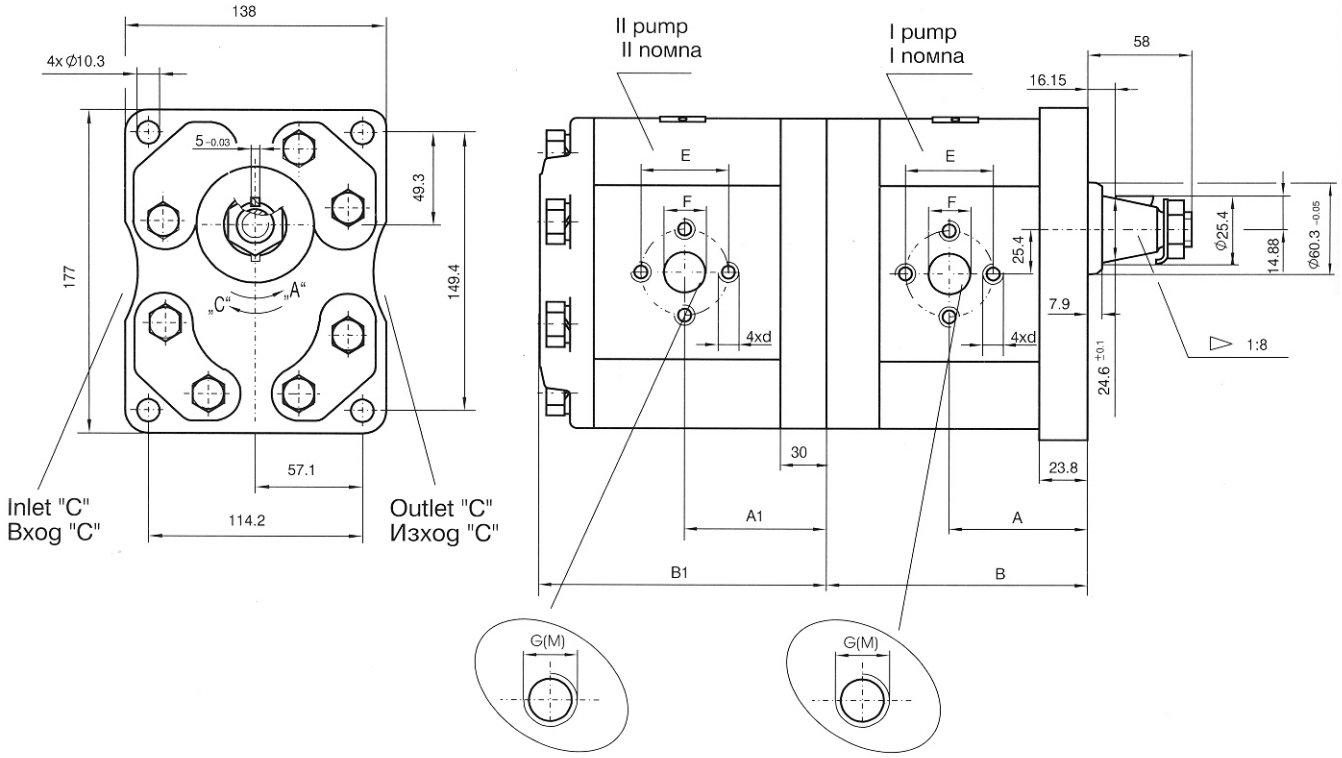

Type Тип	I pump I помпа											
	Dimensions Размери mm											
	A	B	Inlet Вход					Outlet Изход				
			E	F	d	M	G	E	F	d	M	G
A(C)95X1	66	138.3	Ø50.8	Ø27	M10	M33x1.5	G1"	Ø50.8	Ø27	M10	M33x1.5	G1"
A(C)120X1	66	138.3	Ø50.8	Ø27	M10	M33x1.5	G1"	Ø50.8	Ø27	M10	M33x1.5	G1"
A(C)140X1	72.3	150.8	Ø61.9	Ø33.5	M12	M42x1.5	G1 1/4"	Ø50.8	Ø27	M10	M33x1.5	G1"
A(C)165X1	72.3	150.8	Ø61.9	Ø33.5	M12	M42x1.5	G1 1/4"	Ø50.8	Ø27	M10	M33x1.5	G1"

Type Тип	II pump II помпа											
	Dimensions Размери mm											
	A1	B1	Inlet Вход					Outlet Изход				
			E	F	d	M	G	E	F	d	M	G
A(C)95X1	72.3	140	Ø50.8	Ø27	M10	M33x1.5	G1"	Ø50.8	Ø27	M10	M33x1.5	G1"
A(C)120X1	72.3	140	Ø50.8	Ø27	M10	M33x1.5	G1"	Ø50.8	Ø27	M10	M33x1.5	G1"
A(C)140X1	78.5	153	Ø61.9	Ø33.5	M12	M42x1.5	G1 1/4"	Ø50.8	Ø27	M10	M33x1.5	G1"
A(C)165X1	78.5	153	Ø61.9	Ø33.5	M12	M42x1.5	G1 1/4"	Ø50.8	Ø27	M10	M33x1.5	G1"

A(C)95...165X1/A(C)95...165X1-normal

A(C)95...165XTM1/A(C)95...165XTM1-metric thread „M"

A(C)95...165XT1/A(C)95...165XT1-GAS thread „G"

A(C)170...325X...1/ A(C)43...94X...1

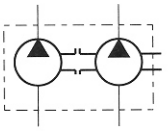

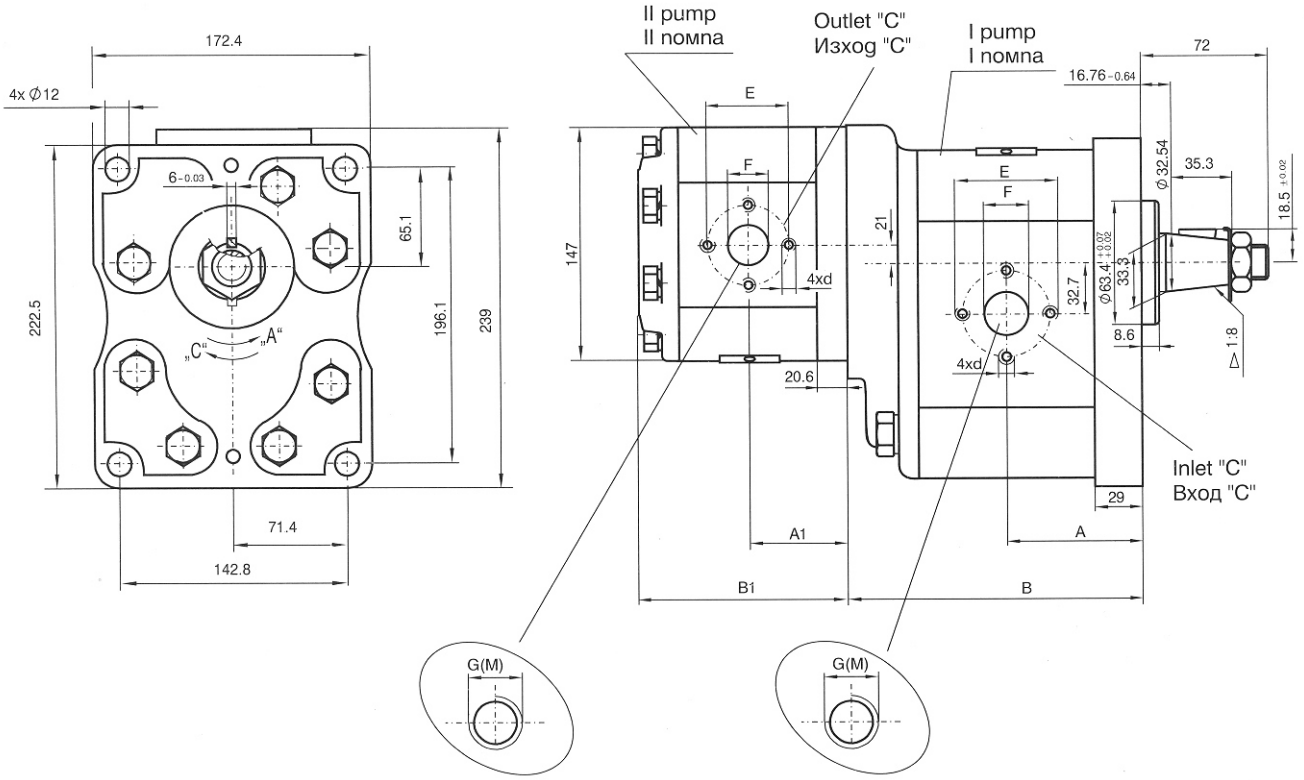

I pump I помпа												
Type Тип	Dimensions Размери mm											
	A	B	Inlet Вход					Outlet Изход				
			E	F	d	M	G	E	F	d	M	G
A(C)170X1	79.7	168.6	Ø72.5	Ø38	M12	M48x2	G1 1/2"	Ø61.9	Ø32	M12	M42x1.5	G1 1/4"
A(C)215X1	79.7	168.6	Ø72.5	Ø38	M12	M48x2	G1 1/2"	Ø61.9	Ø32	M12	M42x1.5	G1 1/4"
A(C)280X1	88.9	187	Ø72.5	Ø38	M12	M48x2	G1 1/2"	Ø61.9	Ø32	M12	M42x1.5	G1 1/4"
A(C)325X1	88.9	187	Ø72.5	Ø38	M12	M48x2	G1 1/2"	Ø61.9	Ø32	M12	M42x1.5	G1 1/4"

II pump II помпа												
Type Тип	Dimensions Размери mm											
	A1	B1	Inlet Вход					Outlet Изход				
			E	F	d	M	G	E	F	d	M	G
A(C)43X1	52	106	Ø39.7	Ø19	M8	M27x1.5	G3/4"	Ø39.7	Ø19	M8	M27x1.5	G3/4"
A(C)54X1	52	106	Ø39.7	Ø19	M8	M27x1.5	G3/4"	Ø39.7	Ø19	M8	M27x1.5	G3/4"
A(C)72X1	60	122	Ø50.8	Ø27	M10	M33x1.5	G1"	Ø39.7	Ø19	M8	M27x1.5	G3/4"
A(C)94X1	60	122	Ø50.8	Ø27	M10	M33x1.5	G1"	Ø39.7	Ø19	M8	M27x1.5	G3/4"

A(C)170...325X1/A(C)43...94X1-normal
A(C)170...325XTM1/A(C)43...94XTM1-metric thread "M"
A(C)170...325XT1/A(C)43...94XT1-GAS thread "G"

A(C)170...325X...1/ A(C)170...325X...1

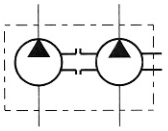

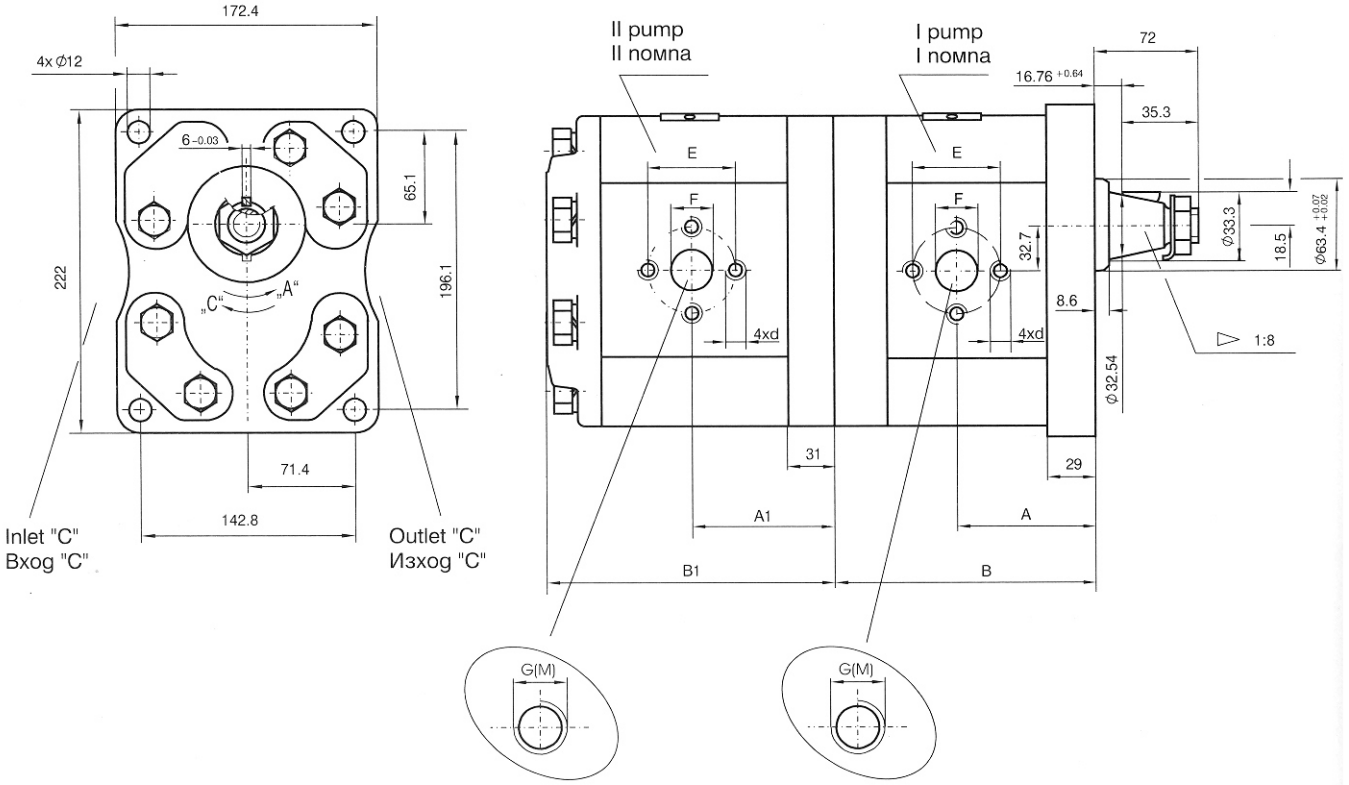

I pump I помпа												
Type Тип	Dimensions Размери mm											
	A	B	Inlet Вход					Outlet Изход				
			E	F	d	M	G	E	F	d	M	G
A(C)170X1	79.7	161.6	Ø72.5	Ø38	M12	M48x2	G1 1/2"	Ø61.9	Ø32	M12	M42x1.5	G1 1/4"
A(C)215X1	79.7	161.6	Ø72.5	Ø38	M12	M48x2	G1 1/2"	Ø61.9	Ø32	M12	M42x1.5	G1 1/4"
A(C)280X1	88.9	180	Ø72.5	Ø38	M12	M48x2	G1 1/2"	Ø61.9	Ø32	M12	M42x1.5	G1 1/4"
A(C)325X1	88.9	180	Ø72.5	Ø38	M12	M48x2	G1 1/2"	Ø61.9	Ø32	M12	M42x1.5	G1 1/4"

II pump II помпа												
Type Тип	Dimensions Размери mm											
	A1	B1	Inlet Вход					Outlet Изход				
			E	F	d	M	G	E	F	d	M	G
A(C)170X1	81.8	163.6	Ø72.5	Ø38	M12	M48x2	G1 1/2"	Ø61.9	Ø32	M12	M42x1.5	G1 1/4"
A(C)215X1	81.8	163.6	Ø72.5	Ø38	M12	M48x2	G1 1/2"	Ø61.9	Ø32	M12	M42x1.5	G1 1/4"
A(C)280X1	91	182	Ø72.5	Ø38	M12	M48x2	G1 1/2"	Ø61.9	Ø32	M12	M42x1.5	G1 1/4"
A(C)325X1	91	182	Ø72.5	Ø38	M12	M48x2	G1 1/2"	Ø61.9	Ø32	M12	M42x1.5	G1 1/4"

A(C)170...325X1/A(C)170...325X1-normal
A(C)170...325XTM1/A(C)170...325XTM1-metric thread „M"
A(C)170...325XT1/A(C)170...325XT1-GAS thread „G"

DIRECTIONAL CONTROL VALVES-CETOP 3

GENERAL DESCRIPTION

RH06...1-...F...

- ✓ 4/3- and 4/2- way directional control valves solenoid operated heavy duty construction
- ✓ Removable AC and DC voltages coils-quick replacement and rotated in any directions without leakage from system
- ✓ Wet pin core tubes connect to tank with high pressure capacity
- ✓ Manual override option
- ✓ Maximum control of hydraulic power
- ✓ Reliability and long life of valves
- ✓ Mounting surface CETOP3 ; NG6

These RH06...F... valves are consisted of a spool , housing , springs and solenoids.

These directional control valves are designed only for CETOP3 solenoid operated. The valves are used for control of high hydraulic power. This model is designed with two-spring centered spool about 4/3- and 4/2- valves. RH06...F... Is operated by wet solenoids , the housing has 5-chember and a vertical “T” duct.

The operated solenoids are DC type. For AC supply the solenoids are provided with rectifier , which is integrated into the installation ground of the connectors. Standard supply voltages is 12V DC , 24V DC , 110V AC(RAC) and 220V AC(RAC). Electrical connectors is by DIN 43 650.

The valve location during assembly is of minor importance , but the horizontal position is generally recommended. For the functional symbol “08” , “19” , “20” and “82” horizontal position is obligatory.

When you have a problem with the electrical supply you have an option to operate the spool manually.

DIRECTIONAL CONTROL VALVES-CETOP 3

GENERAL DESCRIPTION

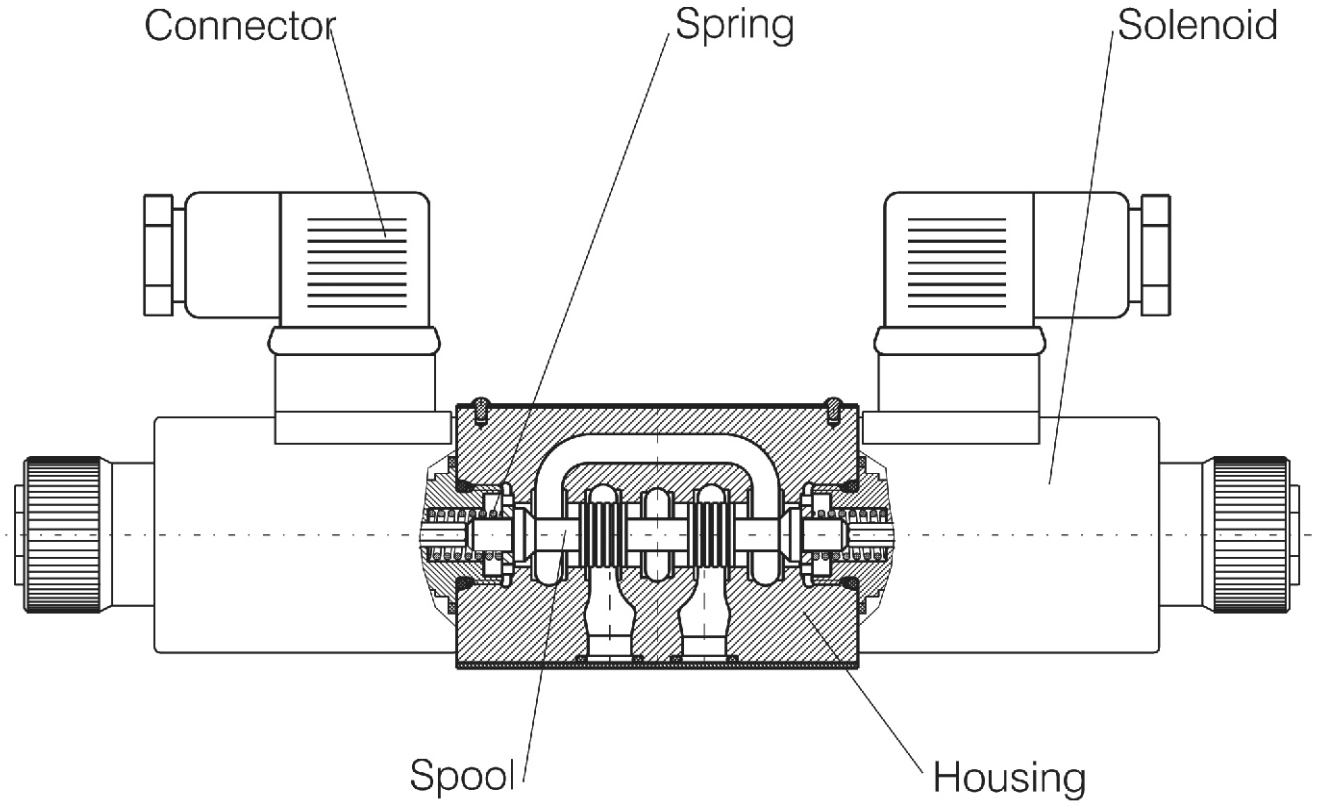

ORDERING CODE

RH | 06 | | 1 - .../... | F | | | |

- Directional control valve
- Nominal size
- Functional symbol see page 3
- Type of control-electrical
- Supply voltage/current frequency see page 7
  - 012/00
  - 024/00
  - 110/50
  - 220/50
- Modification
- Connector see page 7
  - C1
  - C2
  - C3
- Backing of the housing see page 8
  - N
  - T
- Spacers see page 8
  - **Omit** -without spacers
  - **S** -With spacers

DIRECTIONAL CONTROL VALVES-CETOP 3

FUNCTIONAL SYMBOLS

DESIGNATION	SYMBOL	INTERMEDIATE	DESIGNATION	SYMBOL	INTERMEDIATE
00			28		
01			32		
02			33		
04			34		
05			36		
06			39		
08			40		
10			41		
11			42		
12			45		
13			52		
14			61		
16			62		
17			64		
18			68		
19			70		
20			78		
21			82		
24			83		
26			98		
27			99		

DIRECTIONAL CONTROL VALVES-CETOP 5

GENERAL DESCRIPTION

✓ 4/3- and 4/2- way directional control valves with solenoid operation , heavy duty construction

✓ Removable AC and DC voltage coils-quick replacement and rotation in any directions without leakage from the system

✓ Wet pin core tubes connect to tank with high pressure capacity

✓ Manual override option

✓ Maximum control of hydraulic power

✓ Reliability and long life

✓ Mounting surface CETOP5 ; NG10

RH10...1-...F...

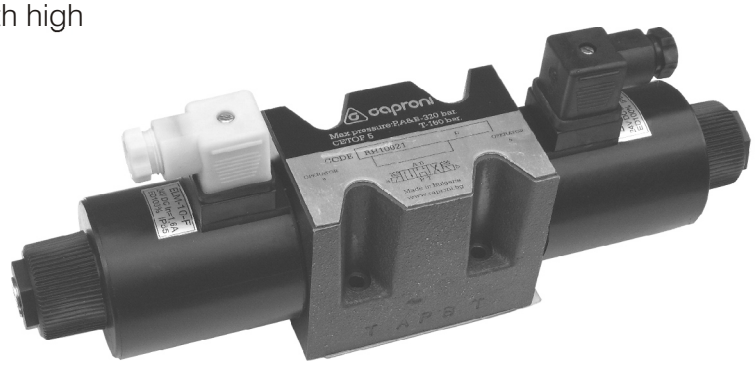

The RH10...1...-...F... valves consist of a spool , housing , springs and solenoids.

The valves are used for hydraulic power control. This model is designed with two-spring centered spool about 4/3- and 4/2- valves. RH10...1...-...F... is operated by wet solenoids , its housing has 5-chambers and vertical “T” duct.

The operating solenoids are DC type. For AC supply the solenoids are provided with rectifier , which is integrated into the installation ground of the connectors. Standard supply voltage are 12V DC , 24V DC , 110V AC(RAC) and 220V AC(RAC). Electrical connectors conform to DIN 43 650 standard.

The valve location during assembly is of minor importance , but the horizontal position is generally recommended. For functional symbols “08”and “20” the horizontal position is obligatory.

At problem with the electric supply an option for manual spool operation is provided.

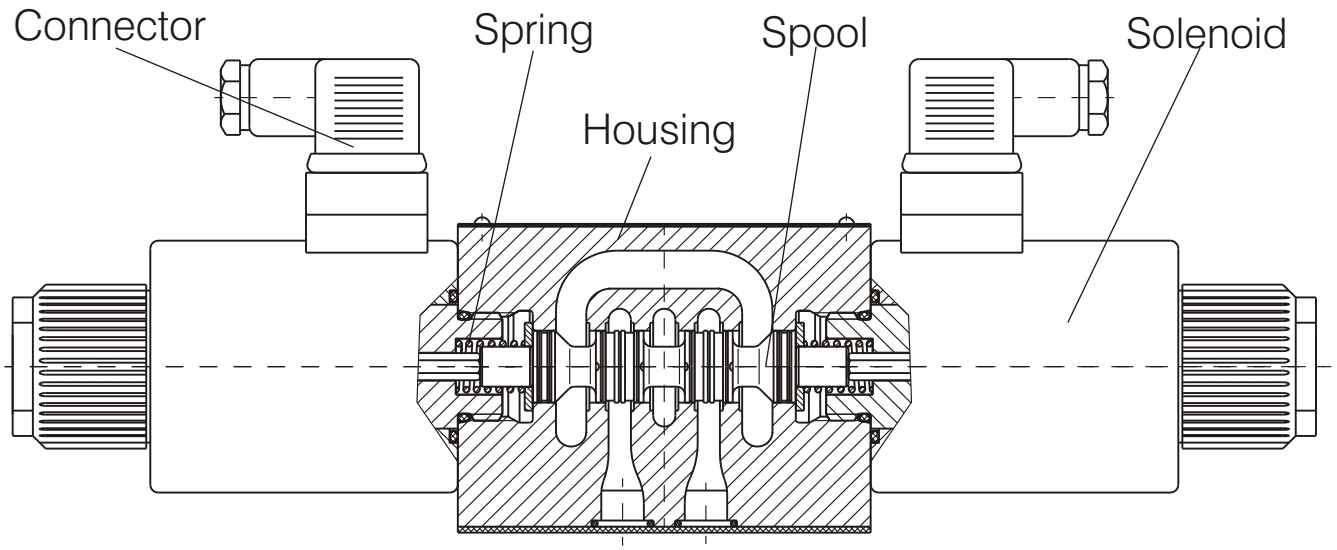

DIRECTIONAL CONTROL VALVES-CETOP 5

ORDERING CODE

RH	10		1	-	.../...	F					

- Directional control valve
- Nominal size
- Functional symbol see page 18
- Type of control-electrical
- Supply voltage/current frequency see page 22
  - 012/00
  - 024/00
  - 110/50
  - 220/50
- Modification
- Connector see page 7
  - C1
  - C2
  - C3
- Backing of the housing see page 24
  - N
  - T
- Screw cap see page 20
  - Omit -with plastic cap
  - M -with metal cap
- Speed control
  - R1-with fixed throttle
  - R2-with adj. throttle

FUNCTIONAL SYMBOLS

DESIG-NATION	SYMBOL	INTERMEDIATE	DESIG-NATION	SYMBOL	INTERMEDIATE	DESIG-NATION	SYMBOL	INTERMEDIATE
00	A B "a" P T "b"		16			39		
01			17			40		
02			18			41		
04			20*			42		
05			21			45		
06			24			61		
08			26			62		
10			27			64		
11			28			68		
12			32			70		
13			33			83		
14			36			20*-with detent		

GENERAL DESCRIPTION

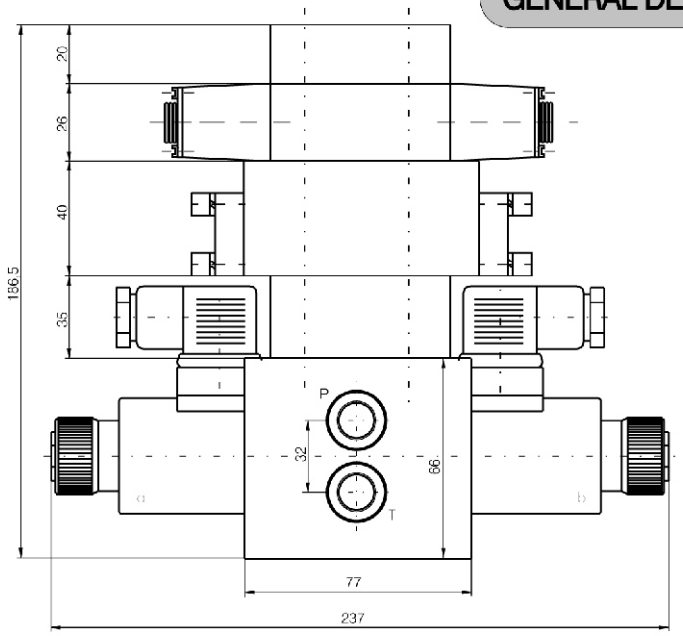

SVM06...-...

- ✓ 4/2 and 4/3 - way directional control valves with solenoid operation made up with inlet cover , outlet cover and cover.
- ✓ Thread connection of ports “A” , “B” “P” and “T”.
- ✓ Possibility of vertical building up with pilot operated check valve , throttle check valve or both standard component.
- ✓ Up to 8 sections.
- ✓ Possibility of parallel and series connection.

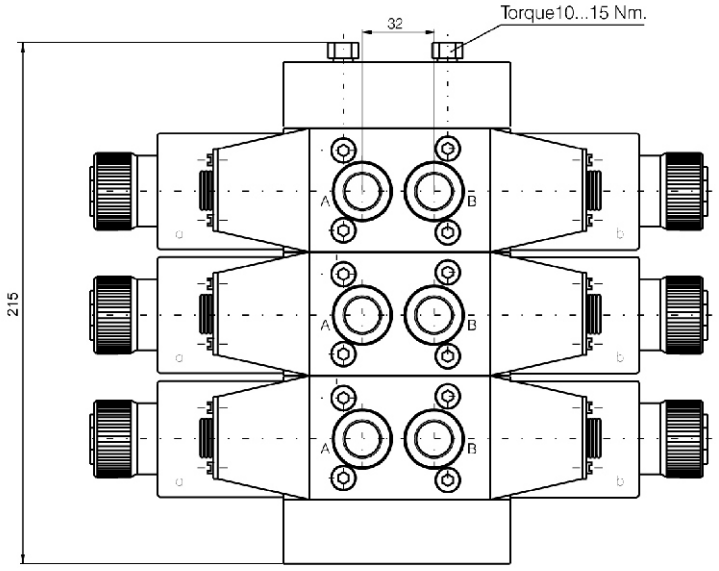

Directional control valves are stackable type RH06...1-.../...GFS...-for vertical building up , and RH06...1-.../...GFST...& RH06...1-.../...GFSTS... - for horizontal stacking.

The stackable valves for vertical building up are standard version CETOP 3.

Parallel connection

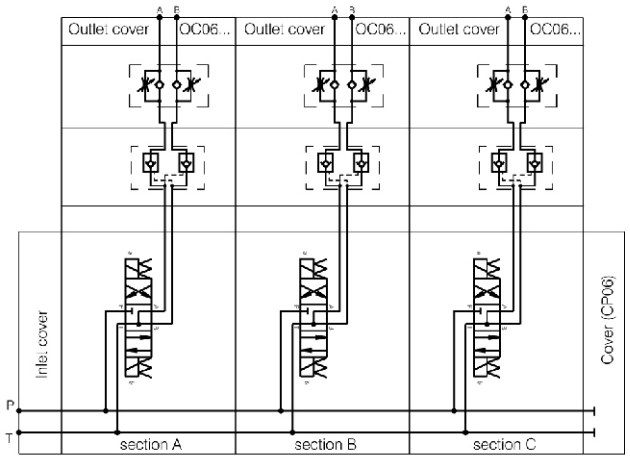

Series connection

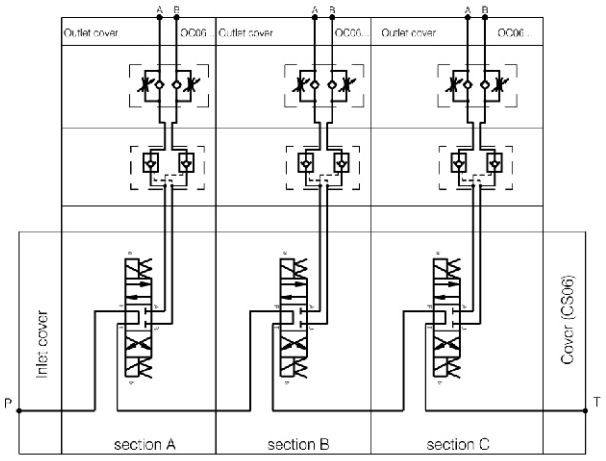

STACKABLE CONTROL BLOCKS

GENERAL DESCRIPTION

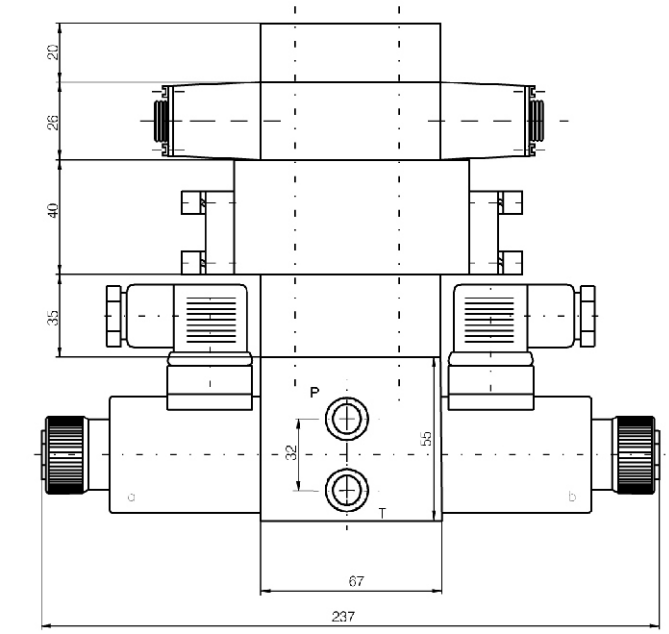

SVM06...-...

Every section can have the following configurations as shown below:

-directional control valve with pilot operated check valve and adjustable throttle check valve ,

-directional control valve with pilot operated check valve ,

-directional control valve with adjustable throttle check valve.

-directional control valve without valves.

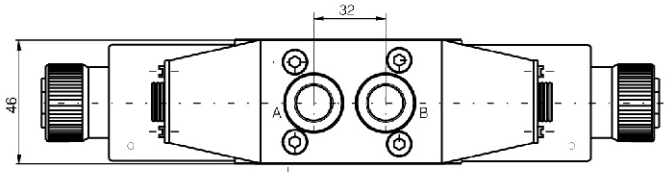

A(B,C,D,E,F)...-without symbol

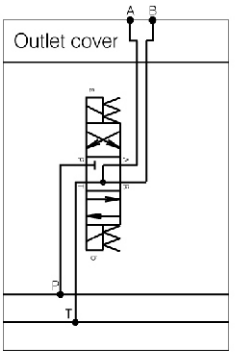

POSSIBLE VERSIONS*

A(B,C,D,E,F)...-KD

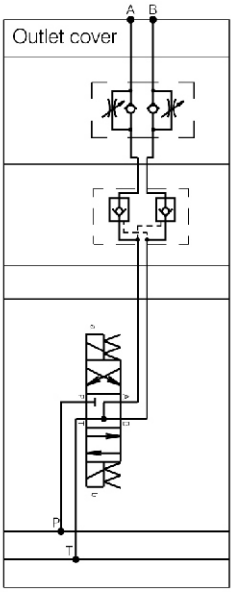

A(B,C,D,E,F)...-K

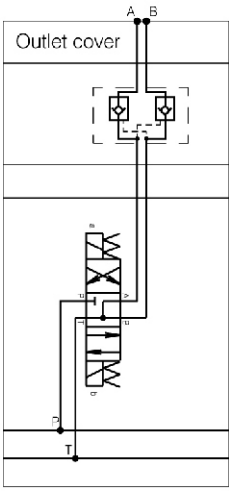

A(B,C,D,E,F)...-D

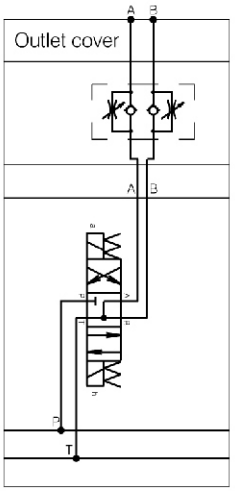

Codifications-see page 47 “ORDERING CODE” marked with.

STACKABLE CONTROL BLOCKS

ORDERING CODE

Horizontal stacking

SVM06 - ... ... - .../... - /... - ... .../ * - ... ...

Stackable valve nominal size 06

Number of section - up to 8

Inlet cover:
- without cover - **Omit**
- without valve - **IC06**
- with pressure relief valve - **ICVP06 or ICVS06**
- with pressure relief & unloading valves - **ICVUP06 or ICVUS06**

see page 44

Modification of directional control valve:
- GFS - **GFS**
- GFST - **GFST**
- GFSTS - **GFSTS**

see pages 38...40

Supply voltage/current frequency:
- **012/00**
- **024/00**
- **110/50**
- **220/50**

see page 7

Stackable valves: repeat for each section
- first section - **A**
- second section - **B**
- third section - **C**
- fourth section - **D**
- fifth section - **E**
- sixth section - **F**

functional symbol of directional control valve

see page 34

- without valves - **Omit**
- with pilot operated check valve & throttle check valve - **KD**
- with pilot operated check - **K**
- with throttle check valve - **D**

see page 46

Cover:
- without cover - **Omit**
- "P" & "T" - blocked - **CP06**
- "P" -blocked , "T" -passage - **CS06**

see page 44

Threads P , T , A & B ports:
- M14x1,5- **Omit**
- M16x1,5- **M1**
- G3/8"- **G1**
- G1/4"- **G2**

STACKABLE CONTROL BLOCKS

ORDERING CODE

Vertical stacking

SVM06V - ... ... - .../... - / ... - ... / * - ... ...

Stackable valve nominal size 06 (vertical stacking)

Number of section - up to 4

Modification of directional control valve:
- GF - **GF**
- GFM - **GFM**
- GFMS - **GFMS**

see pages 35...37

Supply voltage/current frequency:
- **012/00**
- **024/00**
- **110/50**
- **220/50**

see page 7

Stackable valves: repeat for each section
- first section - **A**
- second section - **B**
- third section - **C**
- fourth section - **D**

functional symbol of directional control valve

see page 34

Cover:
- without cover - **Omit**
- series connection("P"-blocked , "T"-passage) - **OCVS06**

see page 44

Threads P , T , A & B ports:
- M14x1,5- **Omit**
- M16x1,5- **M1**
- G3/8"- **G1**
- G1/4"- **G2**

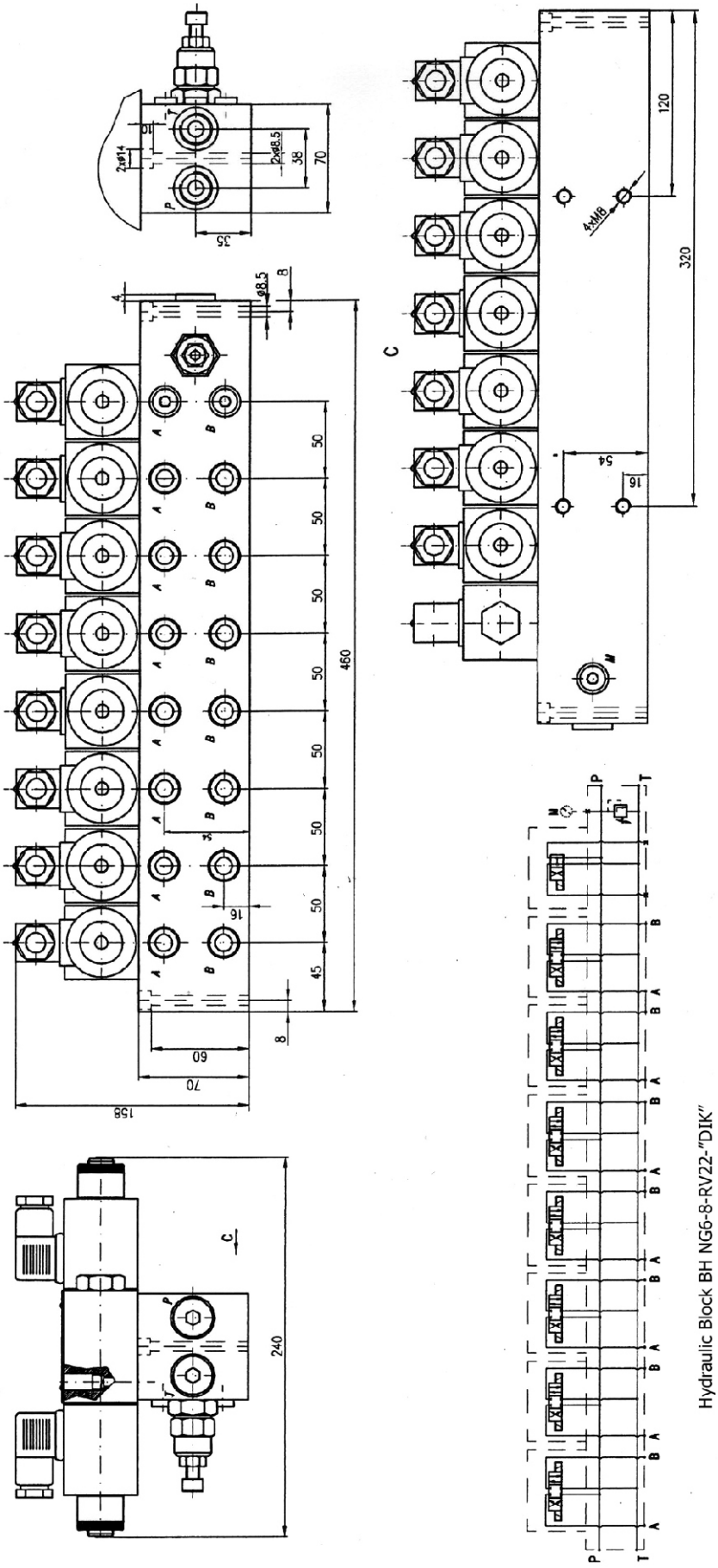

Hydraulic Block BH NG6-8-RV22-"DIK"

A, B and M - G1/4"
P and T - G1/2"

SYMBOL

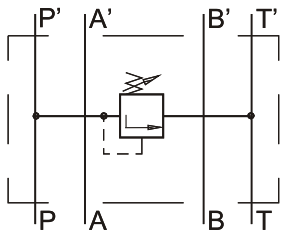

KP10M/...P

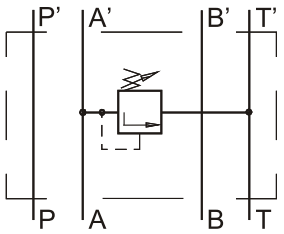

KP10M/...A

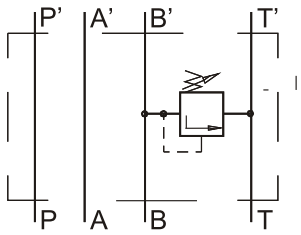

KP10M/...B

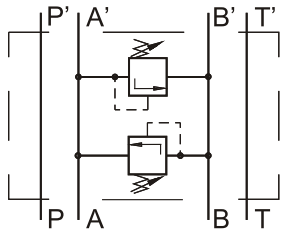

KP10M/...AB2

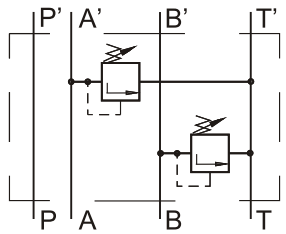

KP10M/...AB

ORDERING CODE

KP	10	M	/	***	-	***

Relief valve

Nominal bore 10mm.

Modular mounting

Rated pressure:
- up to 100 bar.-**10**
- up to 200 bar.-**20**
- up to 320 bar.-**32**

Function:
- at line A to T - **A**
- at line B to T - **B**
- at line P to T - **P**
- at line A and B to T - **AB**
- at line A to B & at B to A - **AB2**

TECHNICAL DATA

Weight with one relief valve with two relief valves	2,700kg 3,050 kg
Rated flow (Δp=2,5 bar.)	40 l/min
Adjustment of pressure range:	
KP10M/10P , KP10M/10A , KP10M/10B , KP10M/10AB , KP10M10AB2	5...100 bar
KP10M/20P , KP10M/20A , KP10M/20B , KP10M/20AB , KP10M20AB2	15...200 bar
KP10M/32P , KP10M/32A , KP10M/32B , KP10M/32AB , KP10M32AB2	20...320 bar
Working liquid-hydraulic oils with characteristics:	
-viscosity	10...400 cSt
-degree of filtration	0,025 mm
-temperature	-20...+80℃

DESCRIPTION

✔ Pressure relief valves-prefill type for plate mounting-KPP10/...B , KPPE10/...B-...

✔ Pressure relief valves-prefill type for pipe and plate mounting with pilot operation-KPP10/...B , KPP...10/...TB(G).

✔ Pressure relief valves-prefill type for pipe and plate mounting with pilot solenoid operation - KPPE10/...B-... , KPPE...10/...TB(G)-...

✔ The pressure relief valve protects the hydraulic drives of overloading or damaging by limiting or maintaining a constant pressure. There is a possibility for pressure range adjustment and they allow such an action even during work.

The unloading relief valve can be used when the system pressure is required to be automatically unloaded at reaching the adjusted pressure.

DIMENSIONS

KPP10/...B

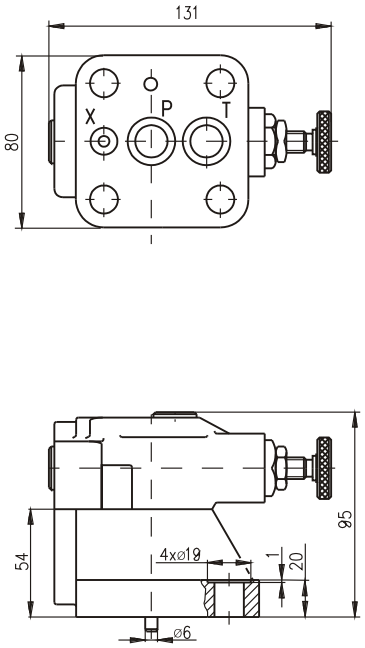

KPPE10/...B-...

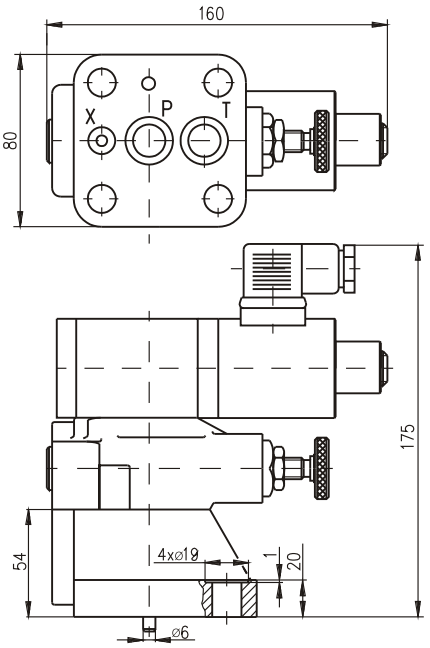

KPP10/...TB(G)

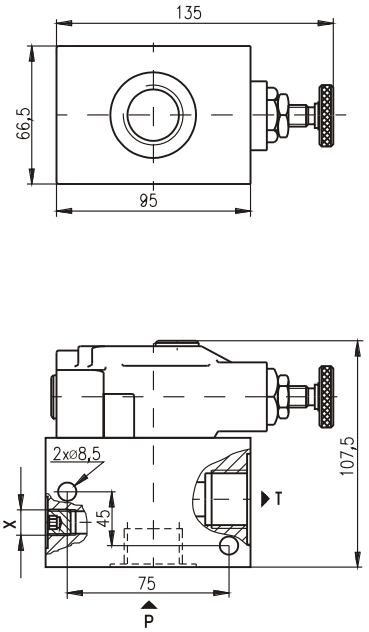

KPPE10/...TB(G)-...

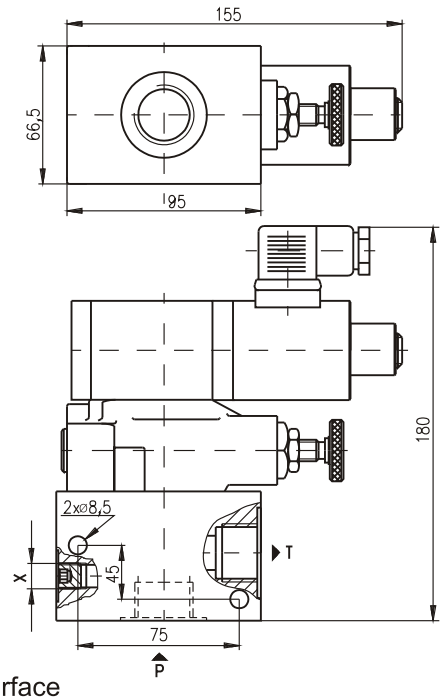

Mounting surface

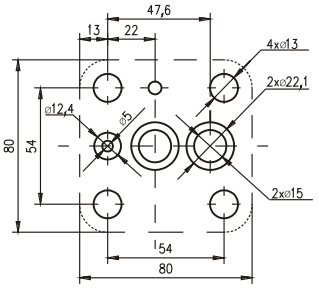

SYMBOL

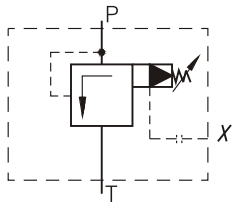

KPP10/...B
KPP10/...TB

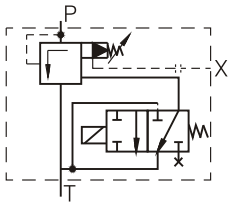

KPPE10/...B-NO
KPPE10/...TB-NO
(normally open)

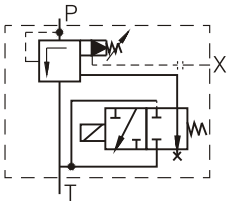

KPPE10/...B-NZ
KPPE10/...TB-NZ
(normally closed)

ORDERING CODE

KPP	***	10	/	***	***	-	***	***

Relief valve prefill type

Type of control:
- pilot operated -omit
- pilot solenoid operated -E

Nominal bore 10mm.

Rated pressure:
- up to 100 bar.-10
- up to 200 bar.-20
- up to 320 bar.-32

Modification:
- for plate mounting -B
- for pipe mounting(metric threads M27x1,5 for P & T line and M12x1,5 for X line) -TB
- for pipe mounting(GAS threads G3/4" for P&T line and G1/4" for X line -TB(G)

Type of control valve:
- solenoid valve normally open -NO
- solenoid valve normally closed -NZ

Supply voltage
- 12VDC -12
- 24VDC -24
- 110VAC -110
- 220VAC -220

TECHNICAL DATA

Weight	KPP10/...B	2,890 kg
	KPPE10/...B-...	4,600 kg
	KPP10/...TB	4,490 kg
	KPPE10/...TB-...	6,200 kg
Max. pressure		320 bar
Rated flow (Δp=2,5 bar.)		160 l/min
Adjustment of pressure range:		
KPP10/10B , KPP10/10TB(G)		4...100 bar
KPP10/20B , KPP10/20TB(G)		10...200 bar
KPP10/32B , KPP10/32TB(G)		20...320 bar
KPPE10/10B-... , KPPE10/10TB(G)-...		4...100 bar
KPPE10/20B-... , KPPE10/20TB(G)-...		10...200 bar
KPPE10/32B-... , KPPE10/32TB(G)-...		20...320 bar

Working liquid-hydraulic oils with characteristics:

-viscosity	10...400 cSt
-degree of filtration	0,025 mm
-temperature	-20...+80℃

DESCRIPTION

✔ Unloading relief valves for plate mounting- KPR-10/...P

✔ Unloading relief valves are designed to switch on or switch off automatically the pump in the hydraulic system , depending on the pressure range at the pressure line (at the point after the check valve).

DIMENSIONS

KPR10/...P

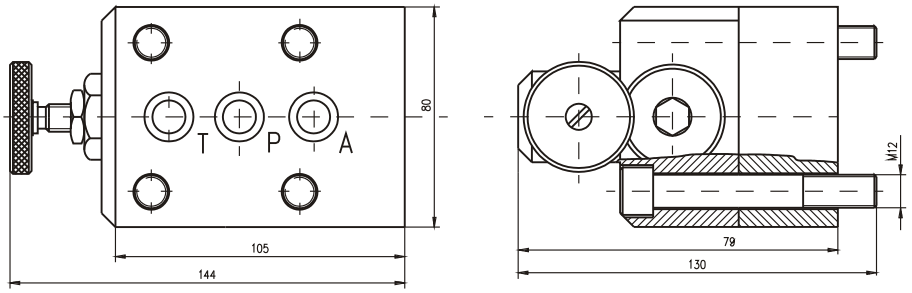

Mounting surface

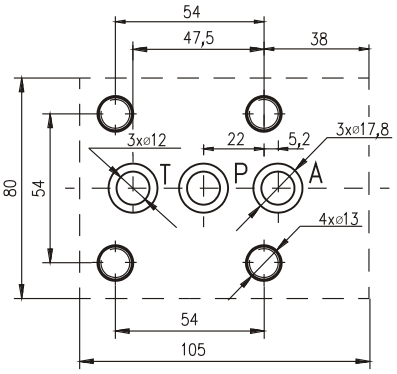

APPLICATIONS

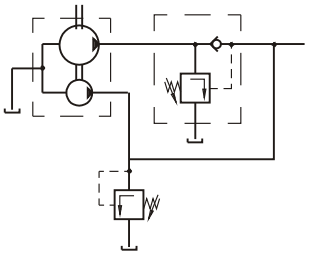

Double pump

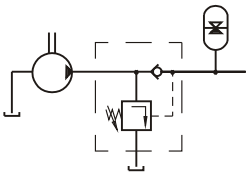

Single pump / accumulator system

ORDERING CODE

KPR	-	10	/	***	P

Unloading relief valve

Nominal bore 10mm.

Rated pressure: up to 63 bar.-**6,3**
up to 160 bar.-**16**

Valve position - at line P

SYMBOL

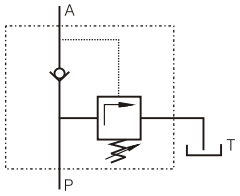

TECHNICAL DATA

Weight		5,440 kg
Max. unloading pressure	KPR-10/6,3P	63 bar
	KPR-10/16P	160 bar
Rated flow (Δp=2,5 bar.)		40 l/min
Working liquid-hydraulic oils with characteristics:		
	-viscosity	10...400 cSt
	-degree of filtration	0,025 mm
	-temperature	-20...+80℃

DESCRIPTION

✔ Pressure reducing valves for modular mounting- KRT6M/...

✔ The pressure reducing valves are used to limit the pressure in the separate sections of the hydraulic systems where constant pressure is achieved (at element outlet) lower than the inlet pressure and independent of its changing.

✔ Mounting surface CETOP3 ; NG6

DIMENSIONS

KRT6M/...P (KRT6M/...A)

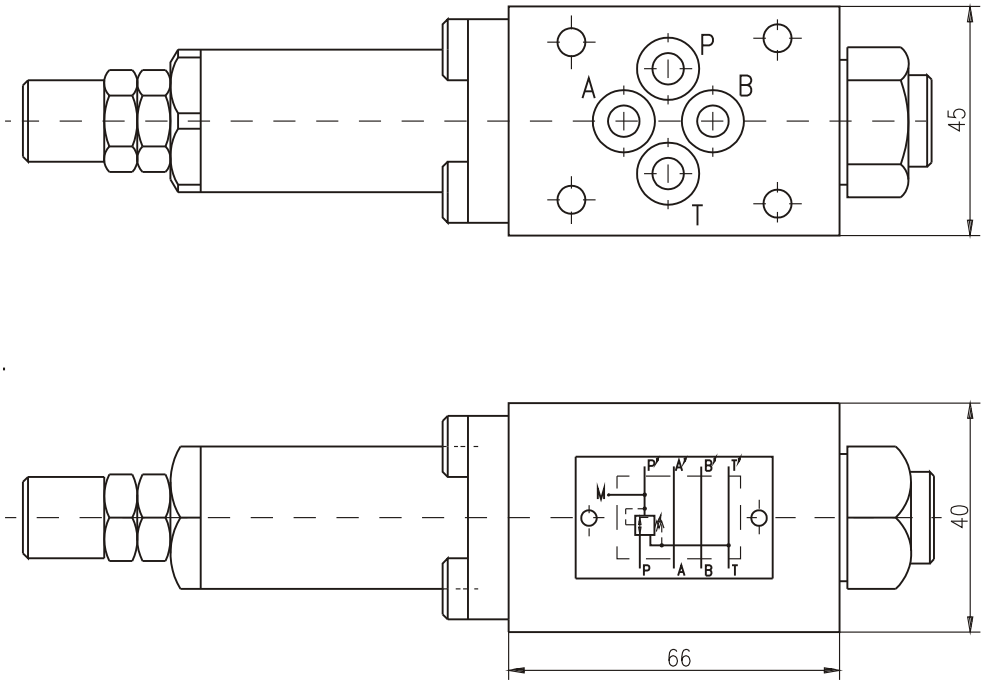

KRT6M/...B

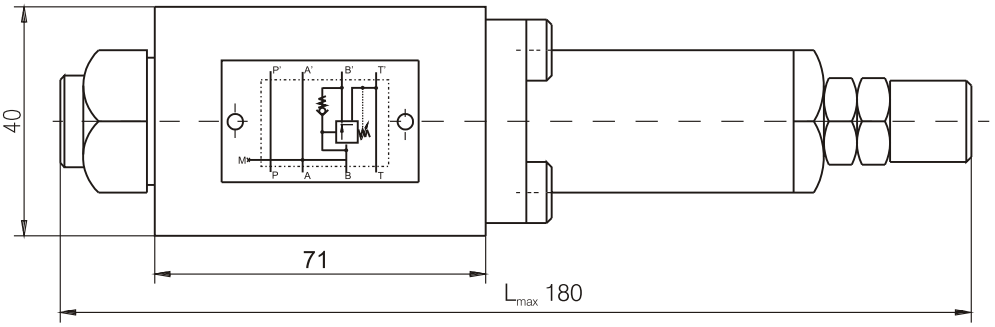

Mounting surface

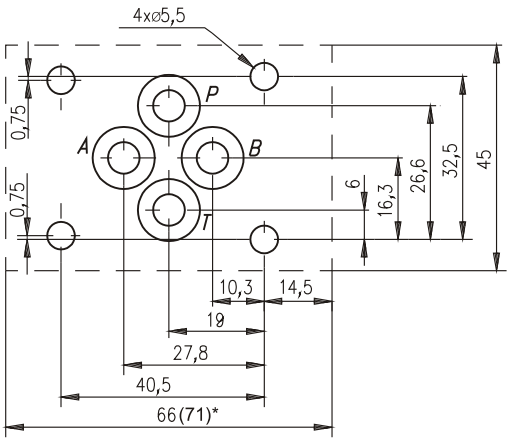

* Only for KRT6M/...B

SYMBOL

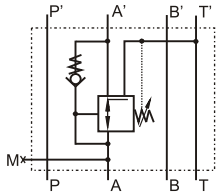

KRT6M/10A

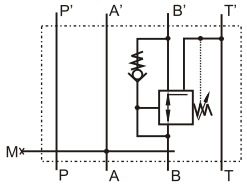

KRT6M/10B

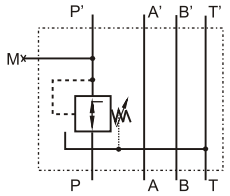

KRT6M/...P

ORDERING CODE

KRT	6	M	/	***	***

Pressure reducing valve

Nominal bore 6mm.

Modular mounting

Rated pressure: up to 16 bar.-**1,6**
up to 100 bar.-**10**

Function - at line P to P' - **P**
at line A' to A - **A**
at line B' to B - **B**

TECHNICAL DATA

Weight		1,165 kg
Max. Pressure		100 bar
Rated flow (Δp=2,5 bar.)		20 l/min
	Adjustment of pressure reducing range:	
KRT6M/10P	Pr(P to P')	10...100 bar
	Pr(P to T)	20...100 bar
KRT6M/1,6P	Pr(to P')	0,8...16 bar
	Pr(P to T)	3...16 bar
KRT6M/10A	Pr(A' to A)	10...100 bar
	Pr(A to T)	20...100 bar
KRT6M/10B	Pr(B' to B)	10...100 bar
	Pr(B to T)	20...100 bar
Working liquid-hydraulic oils with characteristics:		
	-viscosity	10...400 cSt
	-degree of filtration	0,025 mm
	-temperature	-20...+80℃

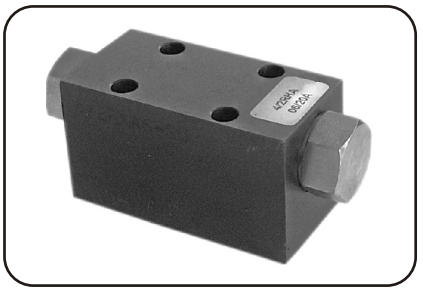

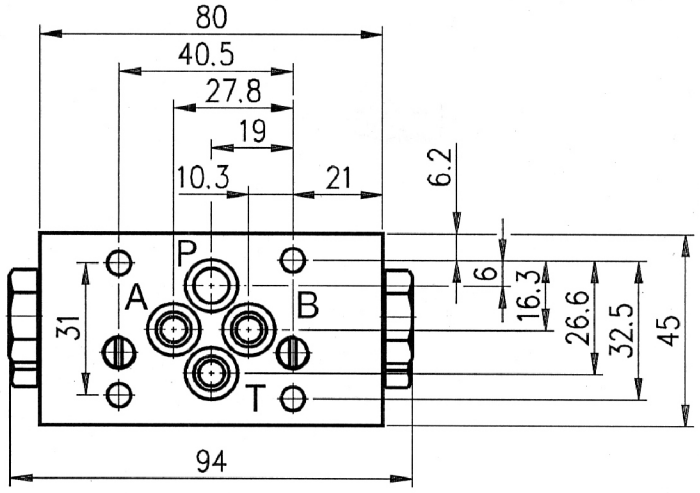

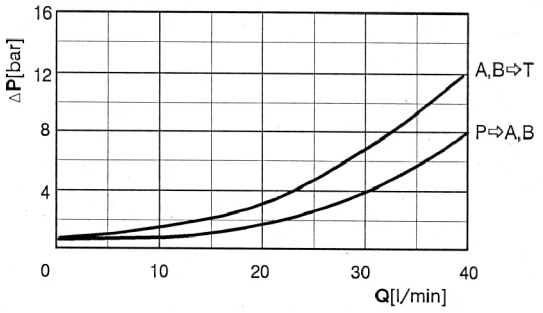

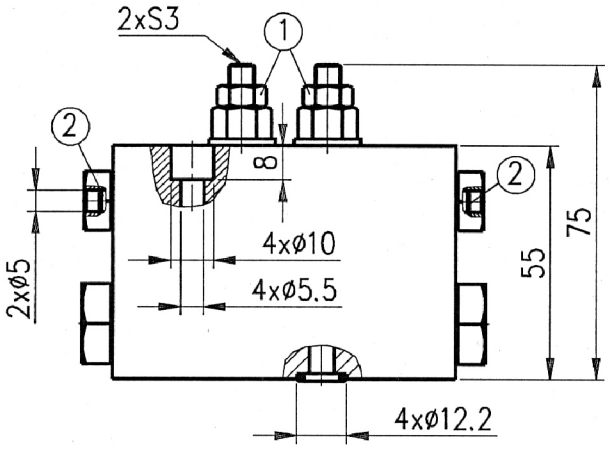

TECHNICAL DATA		
Working pressure P_w	*bar*	50...210
Flow rate	*L/min*	3...40
Pressure adjustment of relief valves position 1		P_w+10%P_w

Working fluid - mineral oil with viscosity from 10 to 400 cSt at 50 °C .
Temperature range: -20°C...+80°C.
Filtration absolute: 25µm .
Initial switching of directional control valve - by push pins position 2 .
Mounting plate- acc. To ISO 4401-AB-03-4A(CETOP3)
Tightening torque of connecting screws on the mounting plate - 8.5 N.m

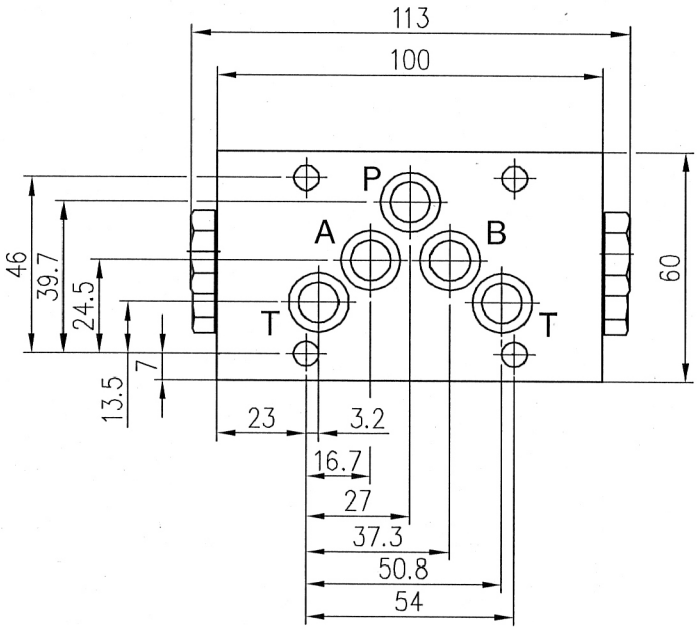

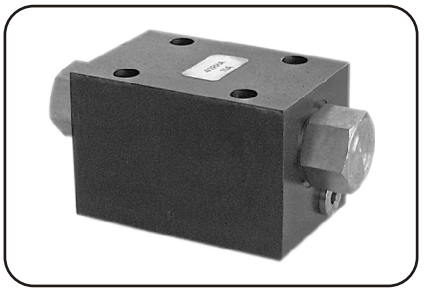

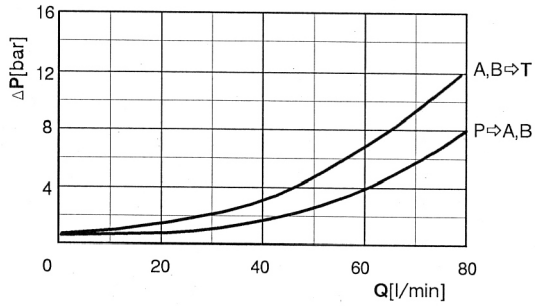

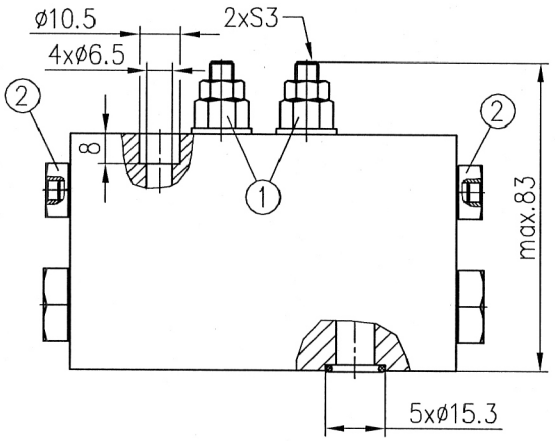

TECHNICAL DATA		
Working pressure P_w	*bar*	50...210
Flow rate	*L/min*	3...80
Pressure adjustment of relief valves position 1		P_w+10%P_w

Working fluid - mineral oil with viscosity from 10 to 400 cSt at 50 °C .
Temperature range: -20°C...+80°C.
Filtration absolute: 25µm .
Initial switching of directional control valve - by push pins position 2 .
Mounting plate- acc. To ISO 4401-AB-05-4A(CETOP5)
Tightening torque of connecting screws on the mounting plate - 14 N.m

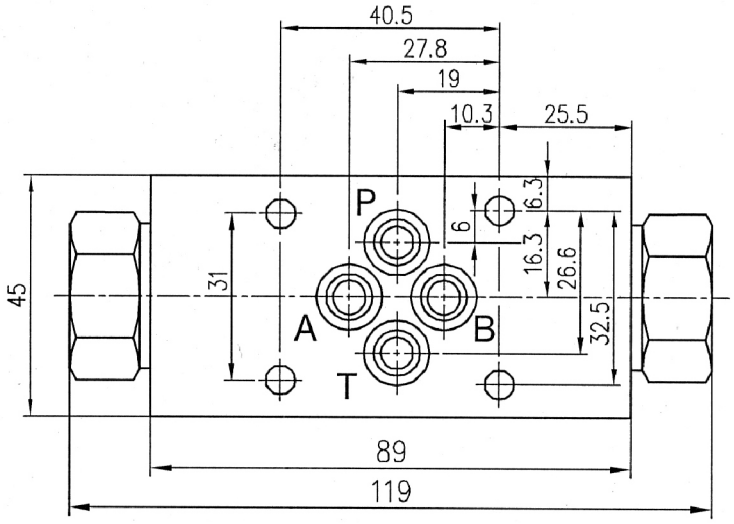

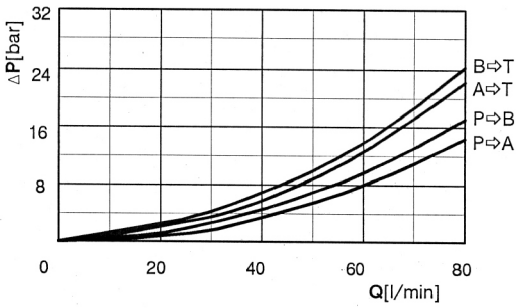

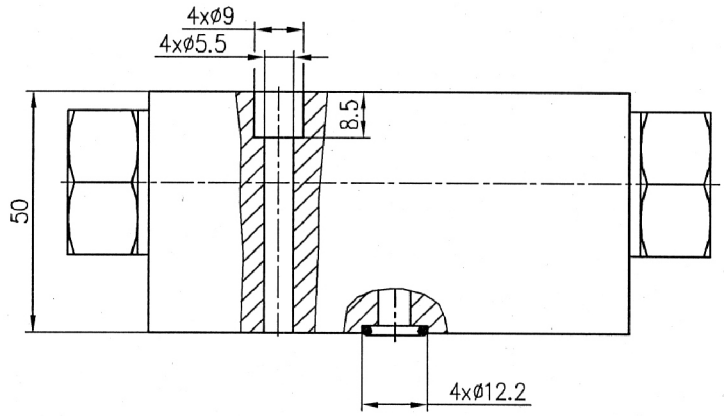

TECHNICAL DATA		
Working pressure	*bar*	30...210
Flow rate	*L/min*	3...40

Working fluid - mineral oil with viscosity from 10 to 400 cSt at 50 °C .
Temperature range: -20°C...+80°C.
Filtration absolute: 25µm .
Mounting plate
acc. To ISO 4401-AB-03-4A(CETOP3)
Tightening torque of connecting screws on the mounting plate - 8.5 N.m

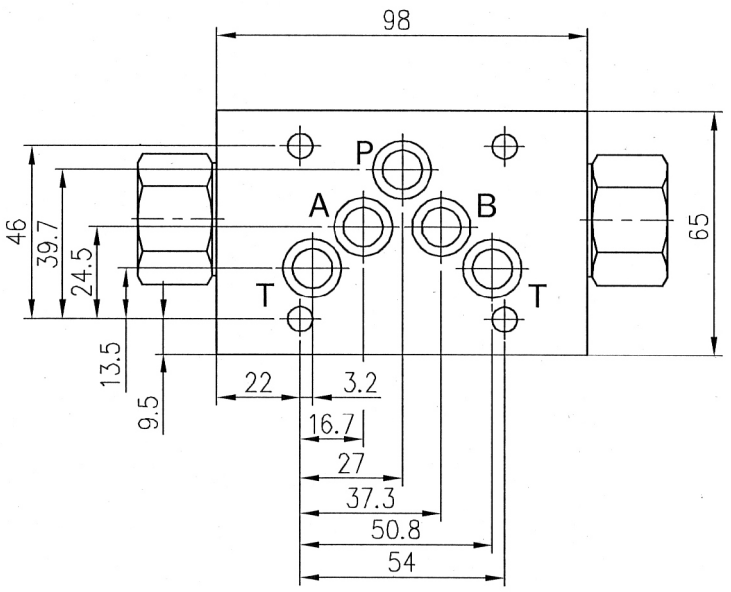

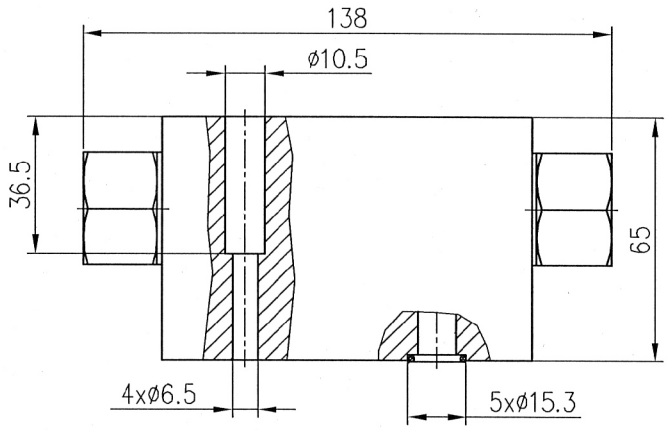

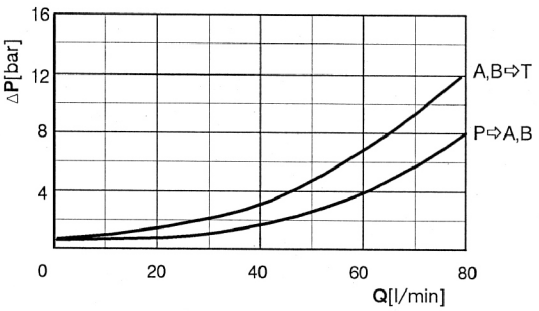

TECHNICAL DATA		
Working pressure	*bar*	30...210
Flow rate	*L/min*	3...80

Working fluid - mineral oil with viscosity from 10 to 400 cSt at 50 °C .
Temperature range: -20°C...+80°C.
Filtration absolute: 25µm .
Mounting plate-
acc. To ISO 4401-AB-05-4A(CETOP5)
Tightening torque of connecting screws on the mounting plate - 14 N.m

CARTRIDGE RELIEF VALVES

KPZ ../.. ..

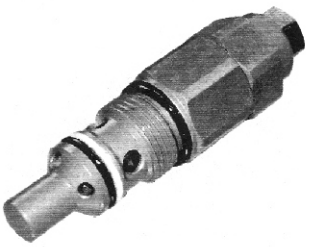

KPZ 10/.. A

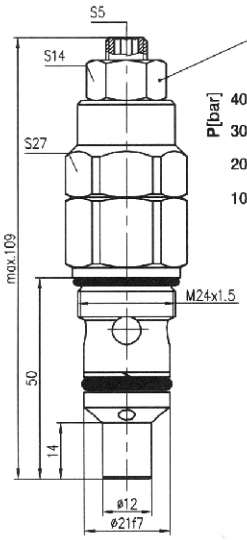

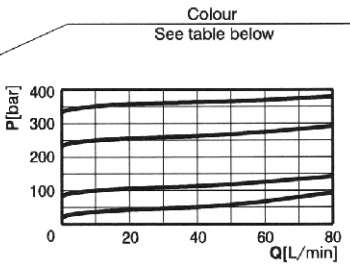

KPZ 6/.. A

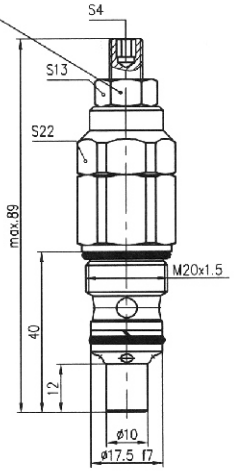

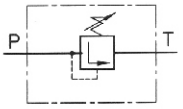

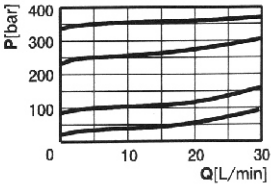

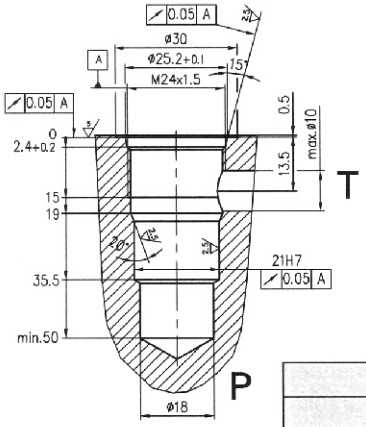

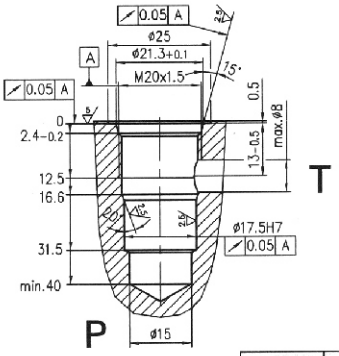

Type	$P_{max.}$	$Q_{max.}$
	bar	L/min
KPZ6/..	350	20
KPZ10/..	250	40

Pressure range			
Code	Standard setting bar (Q=5l/min)	Adj. pressure range bar	Colour
10	80	10...100	White
25	180	30...250	Yellow
35	250	70...350	Black

Code	Adjustments	
A	Leakproof hex. socket screw	
B	Handknob and locknut	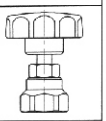

All performances and calibrations are carried out by using hydraulic oil with viscosity approx. 46 cSt at 50°C
Temperature range:-20 °C...+80 °C. Filtration absolute: 25 µm. Tighteing torque 35 N.m.

ORDERING CODE

KPZ 6 / 10 A

- Type
- Pressure range code: **10,25,35**
- Adjustments code: **A,B**

CARTRIDGE RELIEF VALVE

KPPZ 10/..

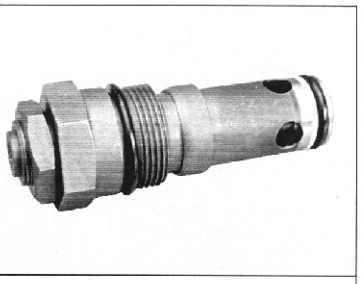

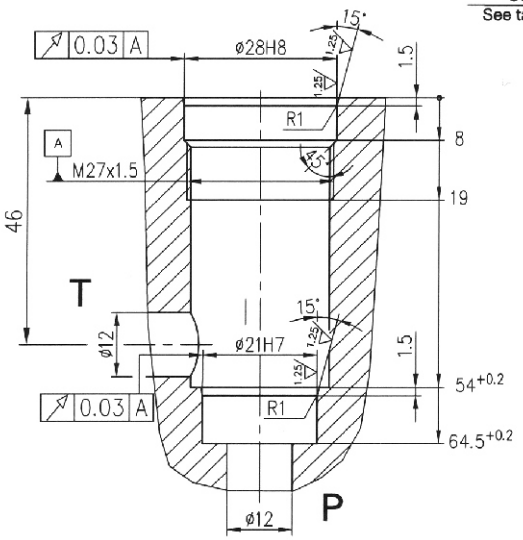

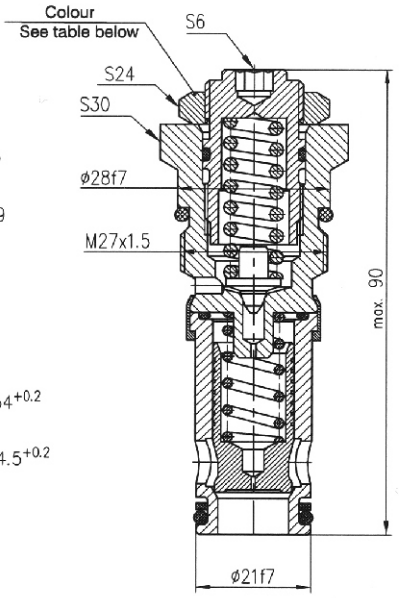

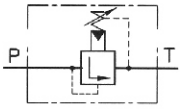

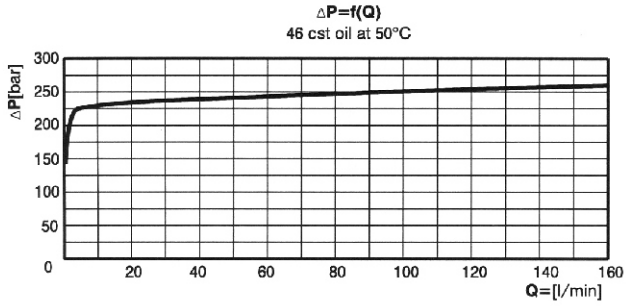

Code	Adj. pressure range bar	Standard setting bar (Q=5l/min)	Q_{nom} l/min	Colour
10	5...100	80	160	White
20	15...200	180		Yellow
32	20...320	250		Black

All performances and calibration are carried out by using hydraulic oil with viscosity approx. 46 cSt at 50 °C

Temperature range: -20 °C...+80°C.

Filtration absolute: 25µm

Tighteing torque 45 N.m

ORDERING CODE

KPPZ 10 / 10

Type	Pressure range code: **10,20,32**

CARTRIDGE RELIEF VALVES

CPL ../..-../..

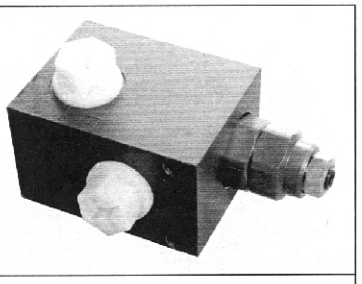

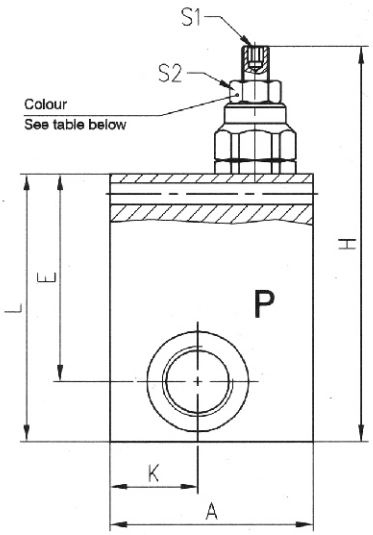

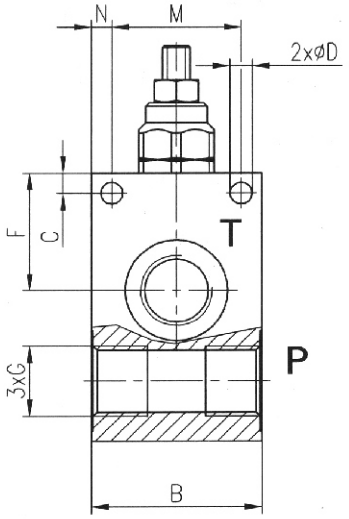

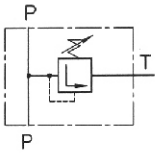

Type	Q_{max}	G	A	B	C	H	K	L	M	N	E	F	D	S1	S2
	L/min		mm	mm	mm	mm	mm	mm	mm	mm	mm	mm	mm	mm	mm
CPL 40/14	40	G 1/4	50	40	8	108	20	65	32	4	47	26	5,5	4	13
CPL 40/38		G 3/8													
CPL 40/12		G 1/2													
CPL 80/12	80	G 1/2	60	50	6	135	26	80	38	6	62	35	6,5	5	17
CPL 80/34		G 3/4									60	33			

Pressure range			
Code	Standard setting **bar** **(Q=5l/min)**	Adj. pressure range **bar**	Colour
10	80	10...100	White
25	180	30...250	Yellow
35	250	70...350	Black

Code	Adjustments
A	Leakproof hex. socket screw
B	Handknob and locknut 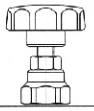

All performances and calibrations are carried out By using hydraulic oil with viscosity approx. 46 cSt at 50 °C.
Temperature range: -20 °C...+80 °C.
Filtration absolute: 25 µm
Tighteing torque 35 N.m.

ORDERING CODE

CPL 40/14-10 A

- Type
- Max.Flow: **40,80**
- Port threads G: **14,38,12,34**
- Pressure range code: **10,25,35**
- Adjustments code: **A,B**

RELIEF VALVE

KP6M/.. ..

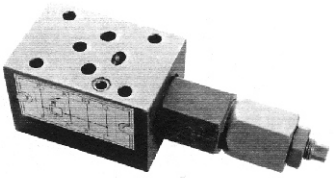

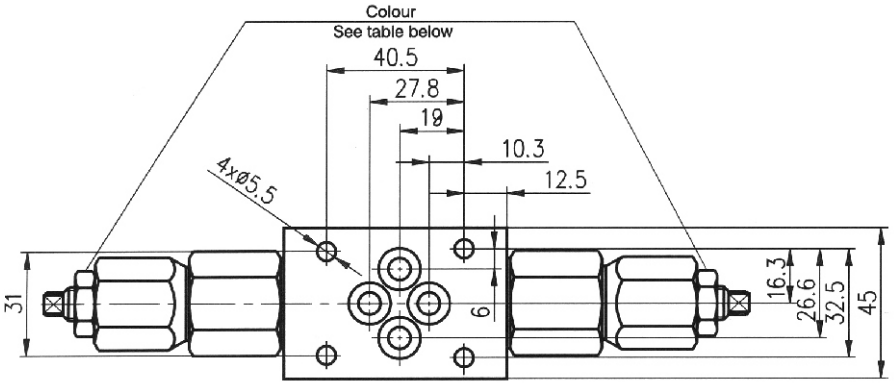

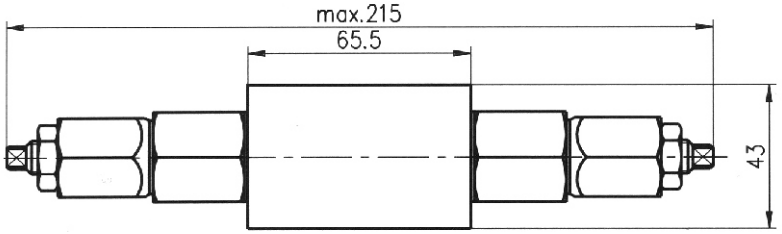

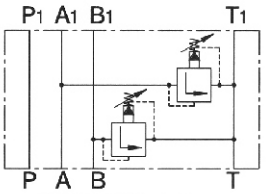

KP6M/..AB

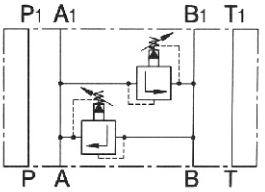

KP6M/..AB2

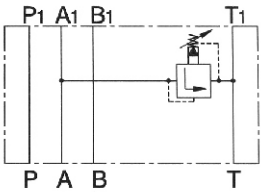

KP6M/..A

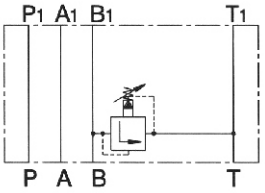

KP6M/..B

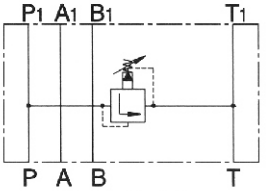

KP6M/..P

All performances and calibration are carried out by using hydraulic oil with viscosity approx. 46 cSt at 50 °C
Temperature range: -20 °C...+80°C.
Filtration absolute: 25µm

Code	Adj. pressure range **bar**	Standard setting **bar** (Q=5l/min)	Q_{nom} l/min	Colour
10	5...100	80	20	White
20	15...200	180		Yellow
32	20...320	250		Black

ORDERING CODE

KP6M/32 AB

- Type
- Pressure range code: **10,20,32**
- Connect relief valve at port: **A,B,AB2,P,AB**

FLOW CONTROL VALVE

RD2 ..

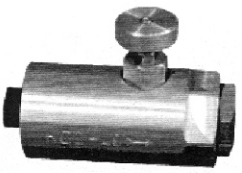

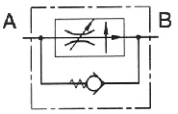

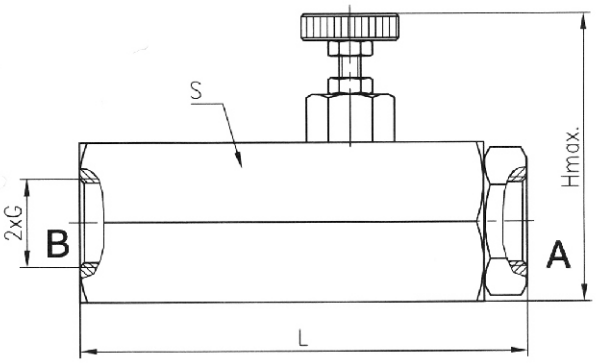

Type	Q_{max}	$Q_{min.}$	$P_{max.}$	L	$H_{max.}$	S	G
	L/min	*L/min*	*bar*	*mm*	*mm*	*mm*	
RD2-10	10	1	250	82.5	53.5	30	G1/4"
RD2-25	25	1,5		87	60	30	M18x1.5
RD2-40	40	1,5		118	72	36	G3/8"

All performances and calibration are carried out by using hydraulic oil
with viscosity approx. 46 cSt at 50 °C .
Temperature range: -20 °C...+80 °C
.Filtration absolute: 25 µm

ORDERING CODE

Type — **RD2 10** — Flow L/min : **10,25,40**

DESCRIPTION

✔ Dividing and combining valves for pipe mounting-FDC.....-...

✔ The dividing and combining valves are designed to separate the flow in the hydraulic system on two equal passages which pass equally in the return line. In that way synchronized movement is obtained for operating the actuator in both directions.

DIMENSIONS

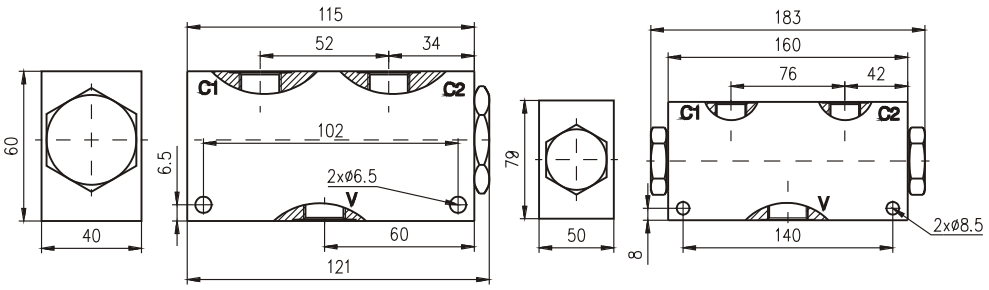

TYPE FDC10	V	C1	C2
FDC10 38-12	G3/8"	G3/8"	G3/8"
FDC10 38-24	G3/8"	G3/8"	G3/8"
FDC10 12-40	G1/2"	G3/8"	G3/8"

TYPE FDC20	V	C1	C2
FDC20 34-90	G3/4"	G1/2"	G1/2"
FDC20 100-150	G1"	G3/4"	G3/4"

ORDERING CODE

FDC	***	***	-	***

Dividing and combining valve

Modifications: -10, -20

Connection "V" threads: G3/8"-38, G1/2"-12, G3/4"-34, G1"-100

Flow rate range: modification - 10: 4...12 l/min - **12**; 12...24 l/min - **24**; 24...40 l/min - **40**

modification - 20: 40... 90 l/min - **90**; 80...150 l/min - **150**

SYMBOL

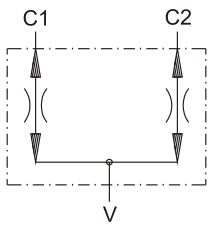

TECHNICAL DATA

Max. Pressure		210 bar
Rated flow	FDC10 38-12	4...12 l/min
	FDC10 38-24	12...24 l/min
	FDC10 12-40	24...40 l/min
	FDC20 34-90	40... 90 l/min
	FDC20 100-150	80...150 l/min
Accuracy at pressure diff. 12 MPa between C1 and C2 - ΔQ		±5%
Working liquid-hydraulic oils with characteristics:		
-viscosity		10...400 cSt
-degree of filtration		0,025 mm
-temperature		-20...+80℃

FLOW CONTROL VALVE
THREE-WAY

VRF C3/../..

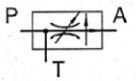

VRF C3/V/..

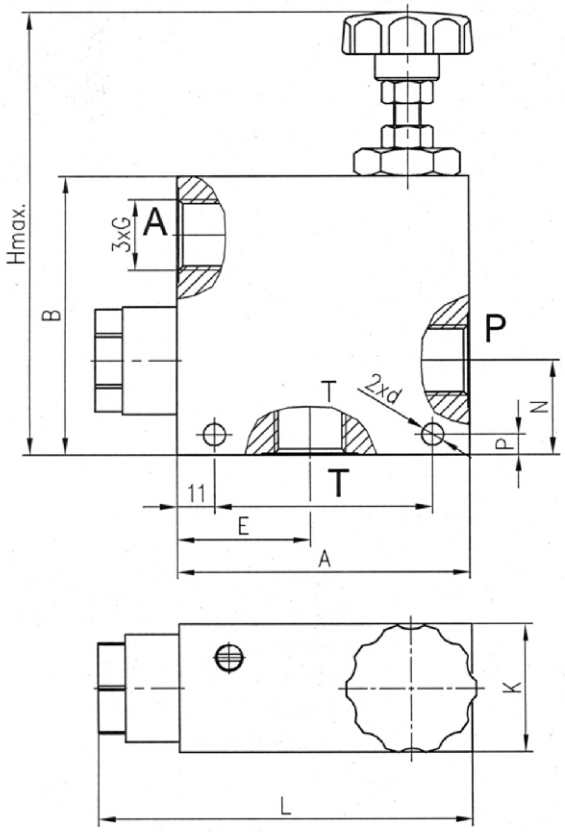

VRF C3/L/..

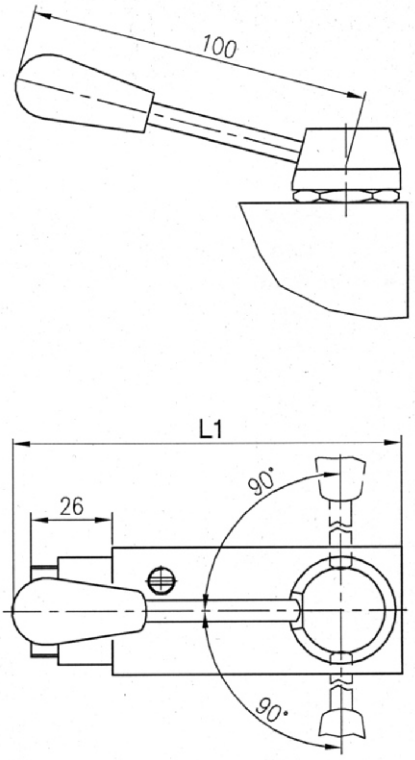

Type	Qmax. [l/min]		Pmax.	G	A	B	E	F	N	P	K	H	L	L1	d
	At port P	At port A	bar		mm	mm	mm	mm	mm	mm	mm	mm	mm	mm	mm
VRF C3/../38	50	30	250	G 3/8"	86	83	39	64	28	6	38	120	112	118	6,5
VRF C3/../12	80	50		G ½"											
VRF C3/../34	120	70		G ¾"	110	110	39	88	35	7	50	147	136	130	8.5

All performances and calibration are carried out by using hydraulic oil with viscosity approx. 46 cSt at 50 °C
.Temperature range: -20 °C...+80 °C.
Filtration absolute: 25µm

ORDERING CODE

VRF C3/V/38

- Type
- Handle design: **V,L**
- Port threads G: **38,12,34**

DIRECTIONAL SOLENOID-OPERATED VALVE

RS 10 ..

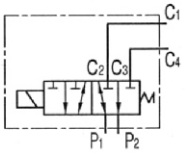

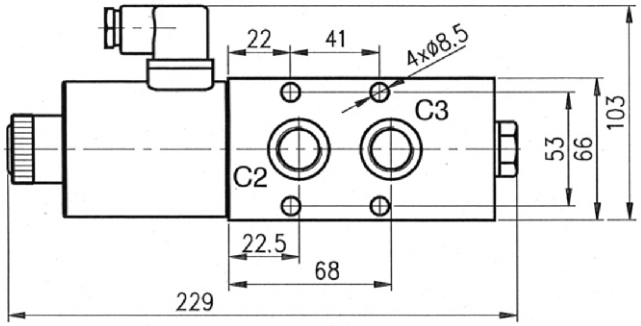

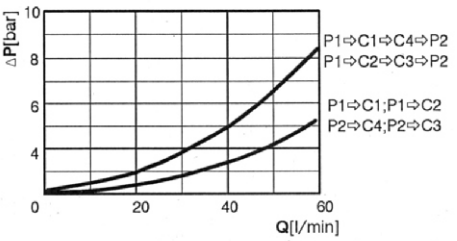

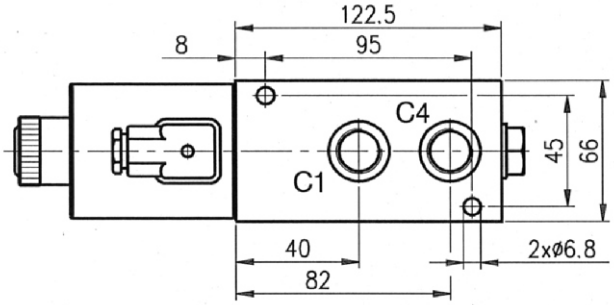

TECHNICAL DATA		
Nominal pressure	*bar*	200
Nominal flow rate	*L/min*	50
Voltage of operating solenoid	*VDC*	12;24

All performances and calibration are carried out by using hydraulic oil with viscosity
Approx. 46 cSt at 50 °C
Temperature range: -20°C...+80°C.
Filtration absolute: 25µm
Tightening torque for solenoid - 30 N.m

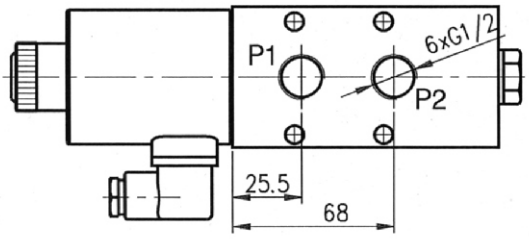

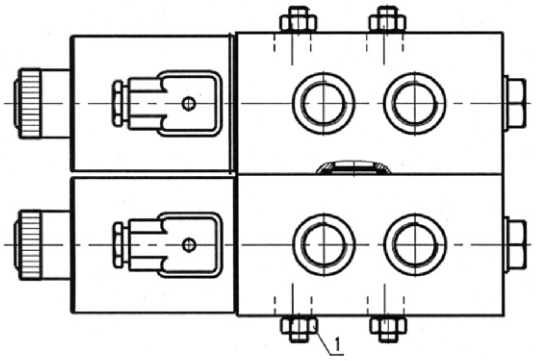

It is possible to make block swith up to 4 directional control valves.
A block with 2 valves is shown.
Tightening torque for detail position 1 - 20^{+3} N.m

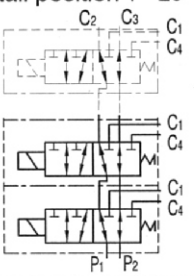

ORDERING CODE

2 RS 10/12

- Nomber of sections: **2,3,4**
  One section: **Omit**
- Type
- Operating voltage V:**12,24**

LINE RUPTURE PROTECTION VALVE

KA .. ..

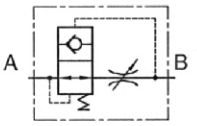

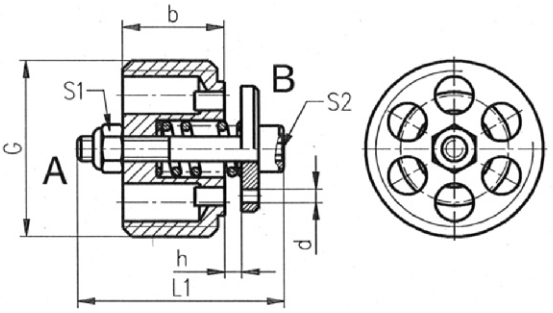

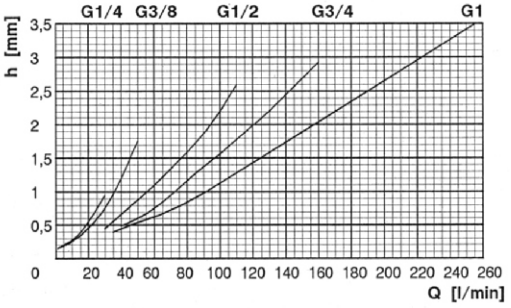

Type	Q_{max}	$P_{max.}$	G	L1	b	$h_{max.}$	S1	S2
	L/min	bar		mm	mm	mm	mm	mm
KA .. 14	35	350	G ¼"	19	8.7	1.2	5.5	2.5
KA .. 38	55		G3/8"	25	12	2		
KA .. 12	110		G ½"	25	12	2.5		
KA .. 34	160		G ¾"	34	16.5	2.8	7	3
KA .. 1	260		G1"	34	18.5	3.5		

The valve screws to end of the thread in the body.
At mounting the side "B"- to internal part of cylinder.
Required flow rate Q cl. Is adjusted - by clearance"h"
All performances and calibration are carried out by using hydraulic oil with viscosity approx. 46 cSt at 50°C
Temperature range: -20 °C...+80 °C.
Filtration absolute 63 µm.

ORDERING CODE

KA 10 14 0.6

- KA: Type
- 10: Operating flow rate Q (l/min)
- 14: Threads G :**14,38,12,34**
- 0.6: Diameter d [mm] : **...**
  Without hole : **Omit**

BODY FOR LINE RUPTURE PROTECTION VALVE

KA .. .. / .. ..

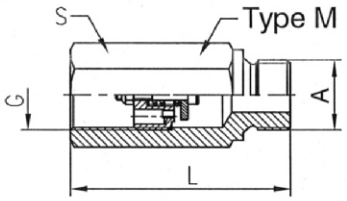

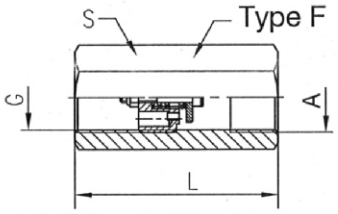

Type	$P_{max.}$	G	L	S	A
	bar		mm	mm	
KA .. 14M..	350	G ¼"	50	19	G¼"
KA .. 38M..		G 3/8"	58	22	G 3/8"
KA .. 12M..		G ½"	65	27	G ½"
KA .. 34M..		G ¾"	78	36	G ¾" M22x1.5

Type	$P_{max.}$	G	L	S	A
	bar		mm	mm	
KA ..14/F..	350	G ¼"	48	19	G ¼"
KA ..38/F..		G3/8"	52	22	G3/8"
KA ..12/F..		G ½"	60	27	G ½"
KA ..34/F..		G ¾"	72	36	G ¾" M22x1.5

ORDERING CODE

KA 20 14/ F 14

- KA: Type
- 20: Operating flow rate Q (l/min)
- 14: Threads G :**14,38,12,34**
- F: Type :**M,F**
- 14: Threads A :**14,38,12,34**

VALVE BLOCK

BPC3/ .. ..

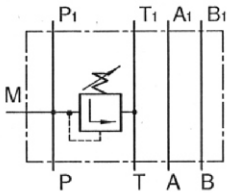

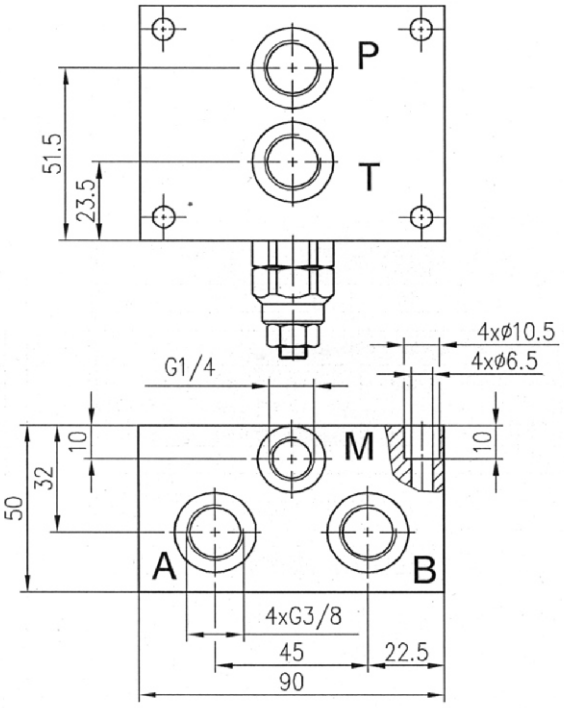

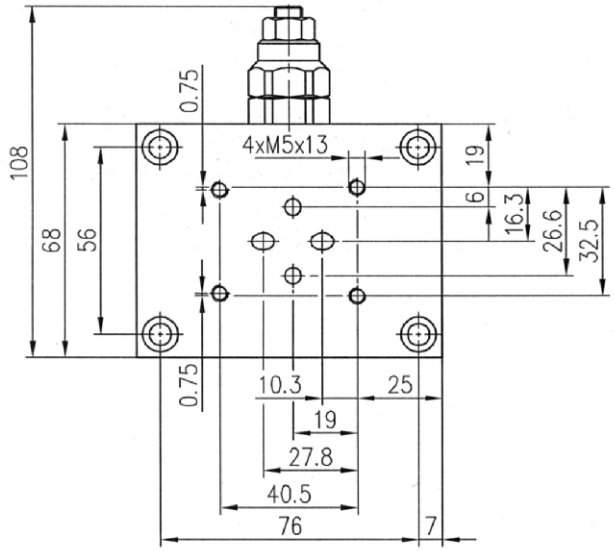

Type	$P_{max.}$	$Q_{max.}$
	bar	L/min
BPC3/.. ..	350	20

Pressure range			
Code	Standard setting **bar** **(Q=5l/min)**	Adj. pressure range **bar**	Colour
10	80	10...100	White
25	180	30...250	Yellow
35	250	70...350	Black

Code	Adjustments	
A	Leakproof hex. socket screw	
B	Handknob and locknut	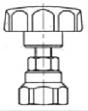

All performances and calibration are carried out by using hydraulic oil with viscosity approx. 46 cSt at 50 °C
Temperature range: -20 °C...+80 °C.
Filtration absolute: 25 µm

ORDERING CODE

BPC3/ 25 A

- Type → BPC3/
- Pressure range code: **10,25,35** → 25
- Adjustments code: **A,B** → A

VALVE BLOCK

BPC5/ .. ..

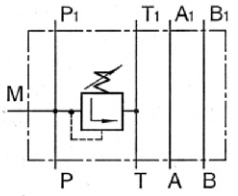

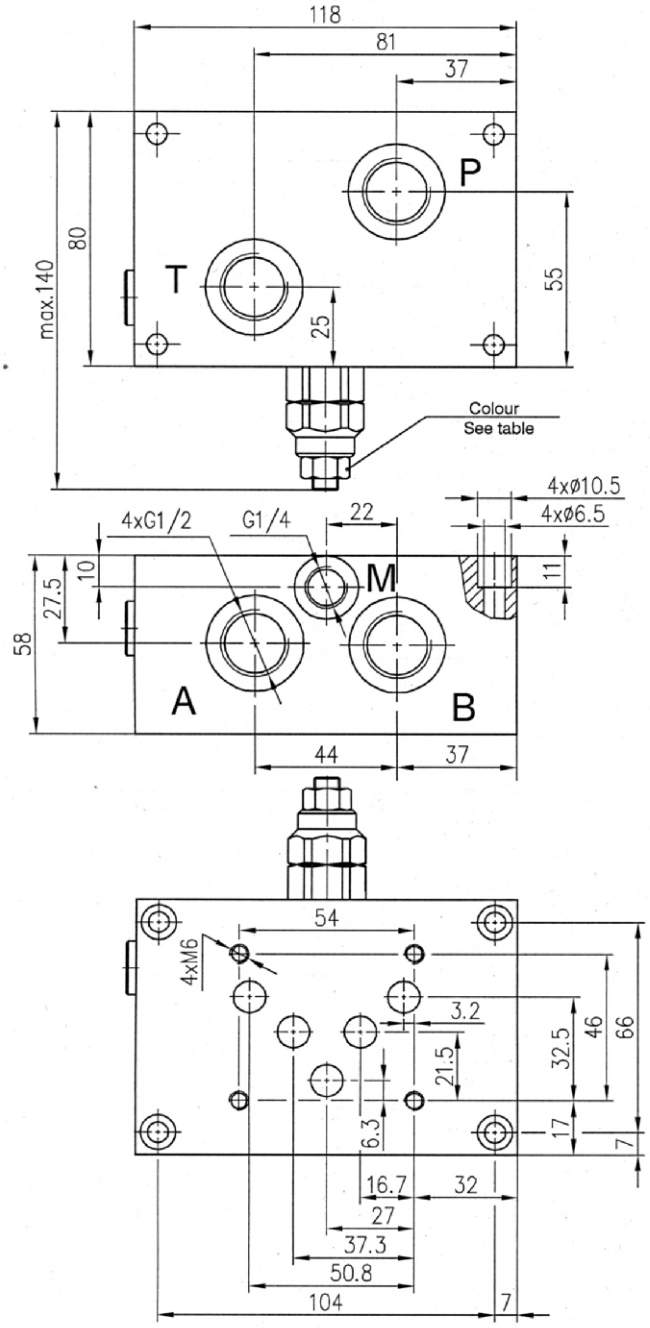

Type	$P_{max.}$	$Q_{max.}$
	bar	L/min
BPC5/.. ..	350	40

Pressure range			
Code	Standard setting **bar** **(Q=5l/min)**	Adj. pressure range **bar**	Colour
10	80	10...100	White
25	180	30...250	Yellow
35	250	70...350	Black

Code	Adjustments	
A	Leakproof hex. socket screw	
B	Handknob and locknut	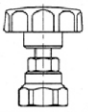

All performances and calibration are carried out by using hydraulic oil with viscosity approx. 46 cSt at 50 °C
Temperature range: -20 °C...+80 °C.
Filtration absolute: 20 µm

ORDERING CODE

BPC5/ 25 A

- Type: BPC5/
- Pressure range code: **10,25,35**
- Adjustments code: **A,B**

KO...

CHECK VALVE TYPE KO-...

BASIC CHARACTERISTICS

Rated Flow (p = 5 bar) .....20;40;63;100l / min
Max. Pressure.....200;320 bar

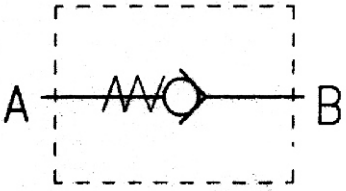

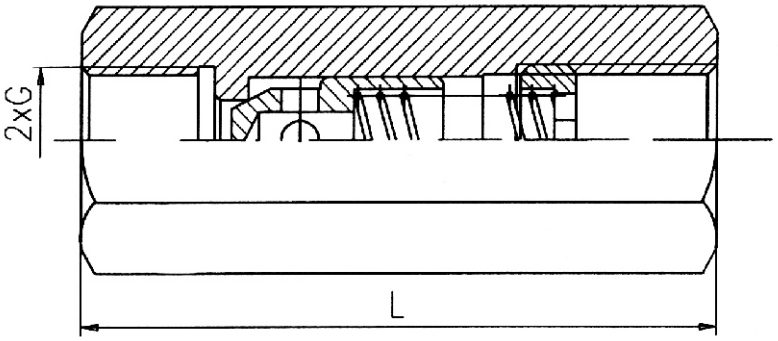

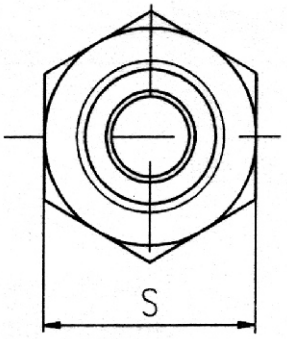

Type	Qmax	Pmax	Pr	L	S	G
	1/min	bar	bar	mm		
KO -1/4”	20	320	1...3	58	19	G 1/4”
KO -3/8”	20	320		58	24	G 3/8”
KO -1/2”	40	320		73	27	G 1/2"
KO -3/4”	63	200		80	36	G ¾”
KO –1”	100	200		100	46	G 1

Check valves with hydraulic operation TYPE KOHU...-SA

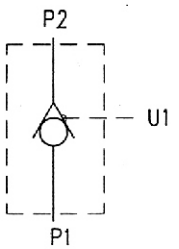

Basic characteristics
Rated flow .....12,20,45 l/min
Max presure.....320 bar

KOHU...-SA

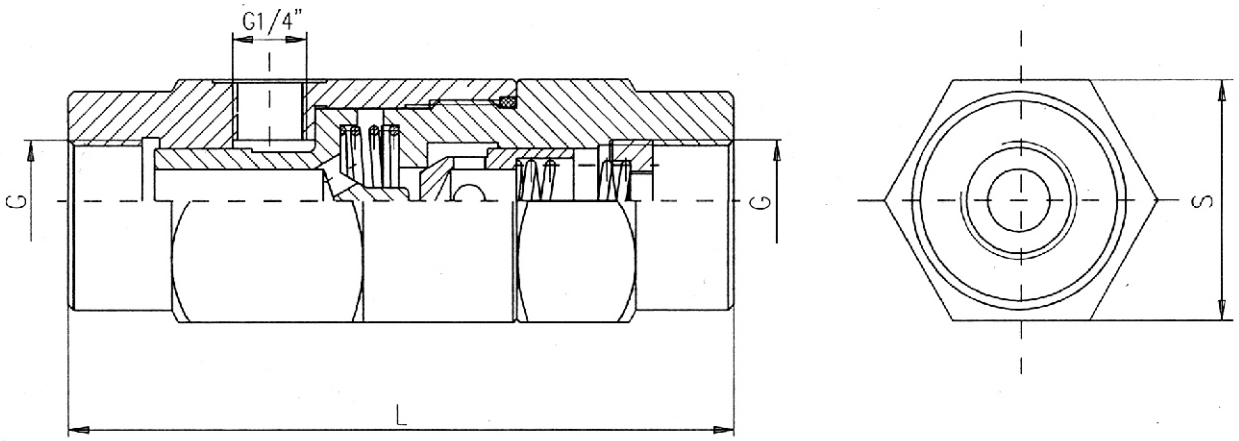

TYPE	Q_{max}	P_{max}	ΔP	P_p/P_u	G	S	L
	l/min	bar	bar			mm	
KOHU 1/4-SA	12	320	0,5	7:1	G1/4"	36	98
KOHU 3/8-SA	20	320	0,5	6:1	G3/8"	40	106
KOHU 1/2-SA	45	320	0,5	5:1	G1/2"	42	118

KOHU...

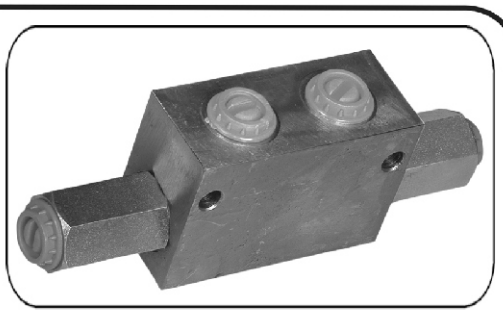

CHECK VALVES WITH HYDRAULIC OPERATION

BASIC CHARACTERISTICS

Rated Flow……..……..12,20,45 l/min
Max. Pressure…….320 bar

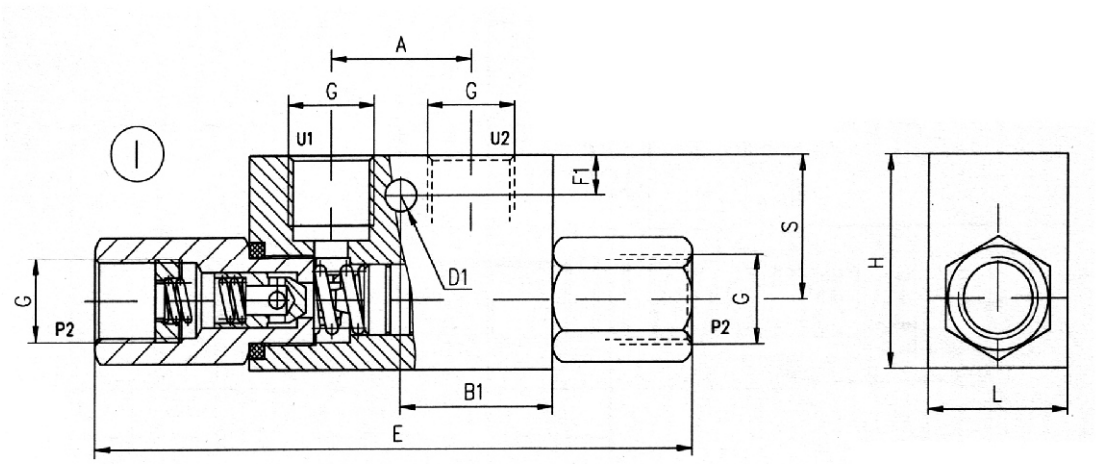

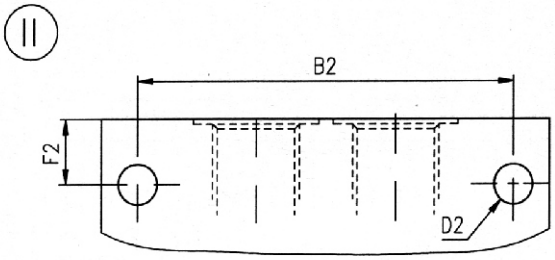

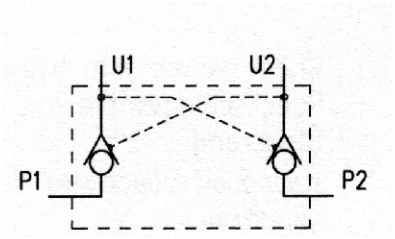

Type	fig.	Q_{max}	P_{max}	ΔP	P_e/P_u	A	B1	B2	D1	D2	E	F1	F2	G	H	L	S	S1
		l/min	bar	bar		mm												
KOHU 1/4	I	12	320	0,5	4:1	29	31,5		6,5		127	8		G1/4	43	29	29	22
KOHU 3/8	I	20	320	0,5	4:1	29	31,5		6,5		127	8		G3/8	43	29	29	22
KOHU 1/2	II	45	320	0,5	4:1	40		75		8,5	174		17	G1/2	60	39	40	32
KOHU 1/4-K1	I	12	320	0,5	4:1	29	31,5		6,5		106	8		G1/4	43	29	29	22
KOHU 3/8-L	I	20	320	0,5	4:1	38	40		6,5		128	8		G3/8	40	29	26	24

DROK... T/32

ADJUSTABLE THROTLES WITH CHECK VALVES

BASIC CHARACTERISTICS

Rated Flow……..20,40 l/min
Max. Pressure……320 bar

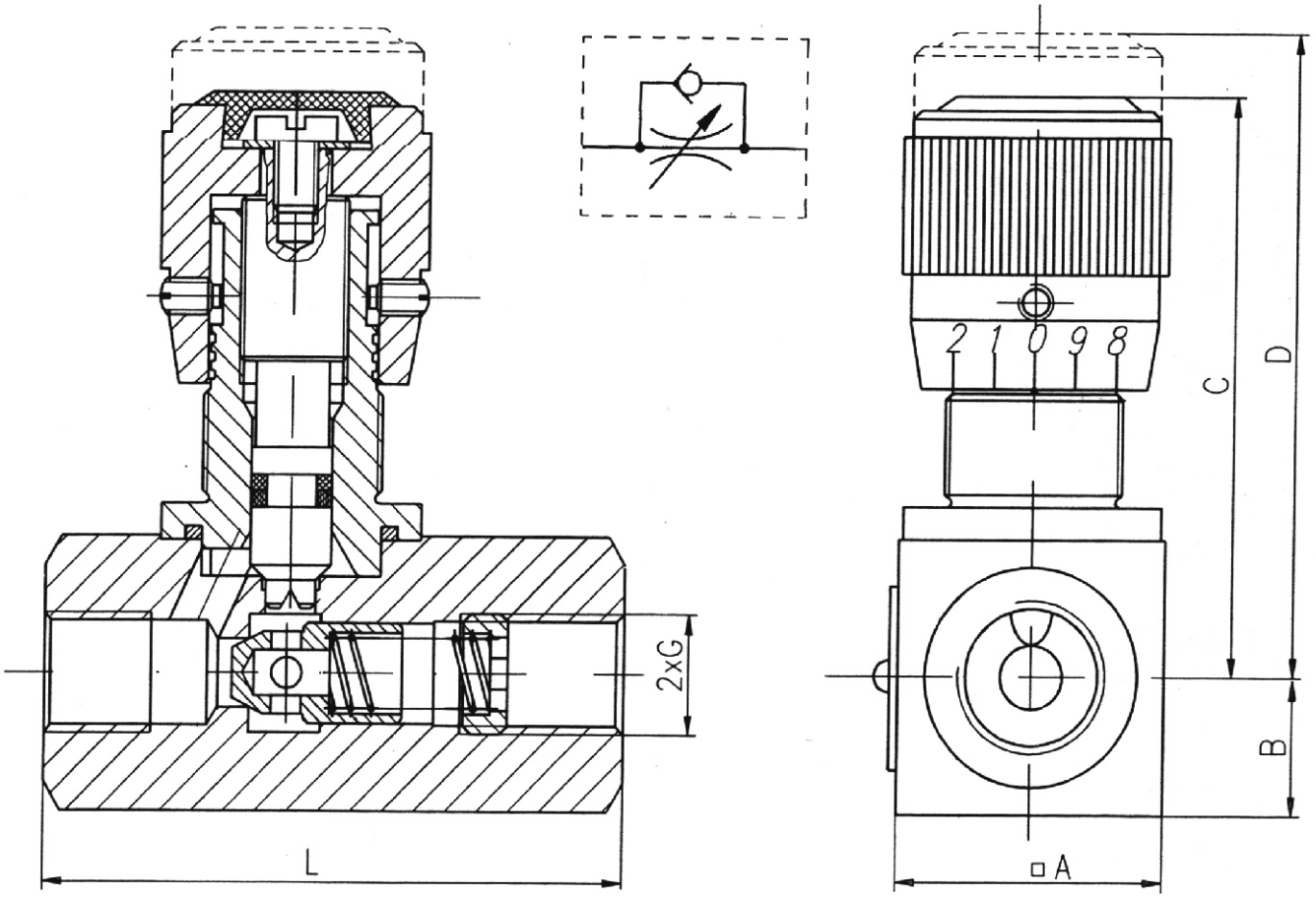

Type	Qmax	Pmax	G	L	A	B	C	D
	1/min	bar						
DROK6T/32-1/4”	20	320	G 1/4”	65	30	15	63	70
DROK6T/32-3/8”	20	320	G 3/8”	65	30	15	63	70
DROK10T/32-1/2”	40	320	G 1/2”	79	32	13.5	66.5	73.5

SYMBOL

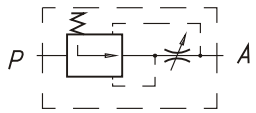

RD.../2

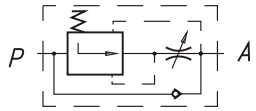

RD.../2A

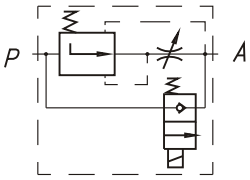

RD.../2...

ORDERING CODE

RD	***	/	2	***

Flow control valve

Nominal bore: 10mm - **10**
16mm - **16**

2-way valve

Modifications: - standard modification - **omit**
-with build in check valve - **A**
-with build in solenoid check valve : operated voltage-12VDC - **1**
operated voltage-24VDC - **2**
-operated voltage 110VAC - **3**
-operated voltage 220VAC - **4**

TECHNICAL DATA

Max. Pressure		320 bar
Rated flow (Δp=5 bar.)	RD10/2...	24 l/min
Rated flow (Δp=8 bar.)	RD16/2...	80 l/min
Minimum flow	RD10/2...	0,05 l/min
Minimum flow	RD16/2...	0,1 l/min
Working liquid-hydraulic oils with characteristics:		
-viscosity		10...400 cSt
-degree of filtration		0,025 mm
-temperature		-20...+80℃

DESCRIPTION

✔ Flow control valves for plate mounting- RD.../2...

✔ The flow control valves are designed to regulate the flow rate in the hydraulic system , independently of the inlet flow and pressure variations in it.

✔ Flow Control Valve with solenoid controlled check valve (channel A or channel B) ensures two different speeds of movement.

DIMENSIONS

RD16/2...

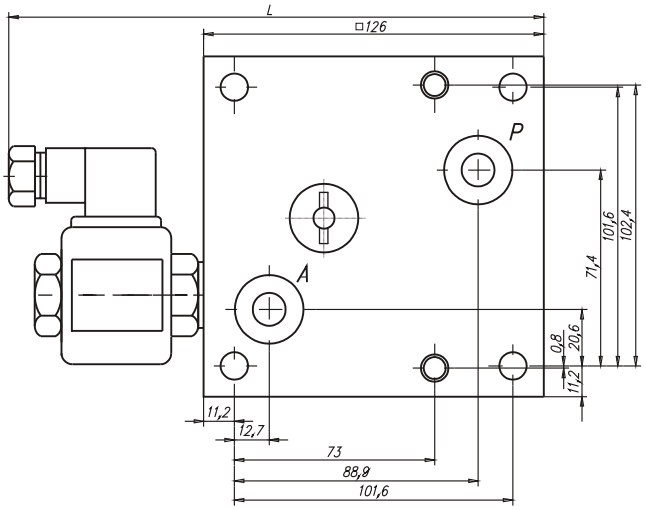

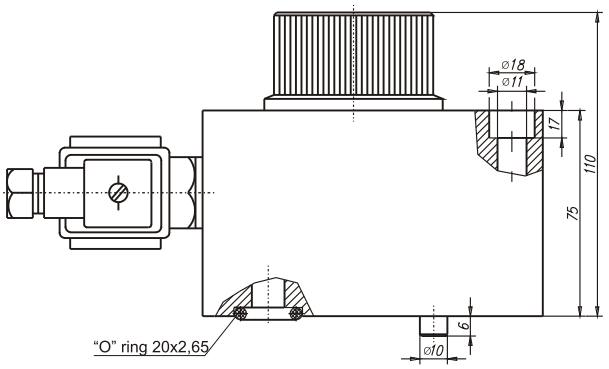

RD10/2...

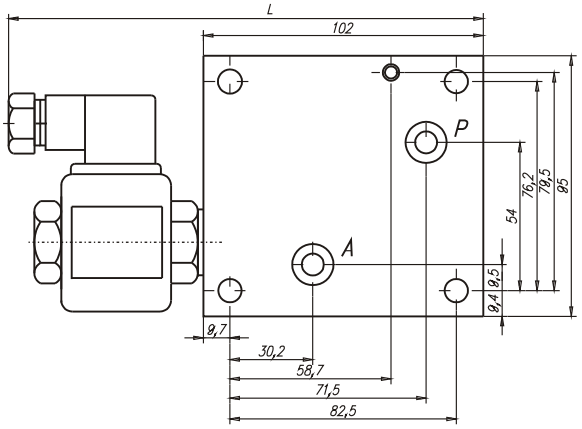

TYPE	Range of regulation	L
	grad.	mm.
RD 10/2	4x360°	102
RD 10/2...	4x360°	175,5
RD 16/2	4x360°	126
RD 16/2...	4x360°	197,5

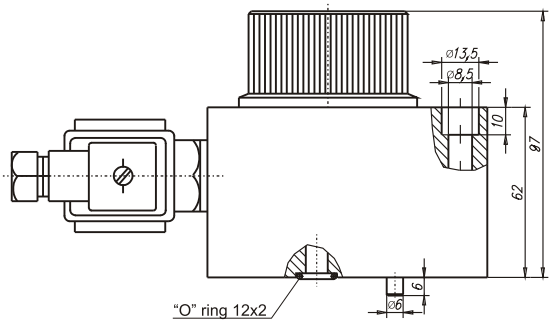

TECHNICAL DATA

Nominal Bore ;
10mm
Rated pressure ;
200 bar
Rated Flow ;
36 ; 50 l min
Working Liquid ;
Hydraulic Oils
With Characteristics ;
Viscosity :
10…400 mm^2 /S
Degree of filtration :
0.063 mm
Temperature :
-20°…80°C

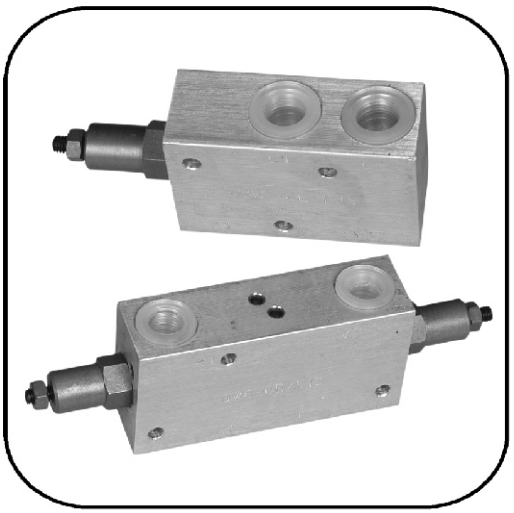

ORDERING CODES

OWC	- ***	E/L	***

"OVER CENTER" VALVES WITH PILOT OPERATION

D-Double verssion S-Single verssion

MODIFICATION

CONNECTIHG THREAD G 1/2" – 1/2

EXAMPLE ;
OWC – DE/L38 – "OVER CENTER" VALVE WITH PILOT OPERATION DOUBLE VERSION, CONNECTING THREAD G 3/8".

"OVERCENTER" VALVES PILOT OPERATION

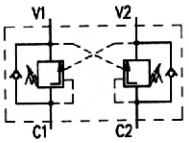

OWC-DE/L...

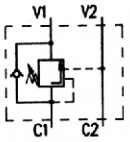

OWC-SE/L...

BASIC CHARACTERISTICS

Rated Flow.....35 l/min
Max. Pressure.....40...250 bar

OWC-DE/L...

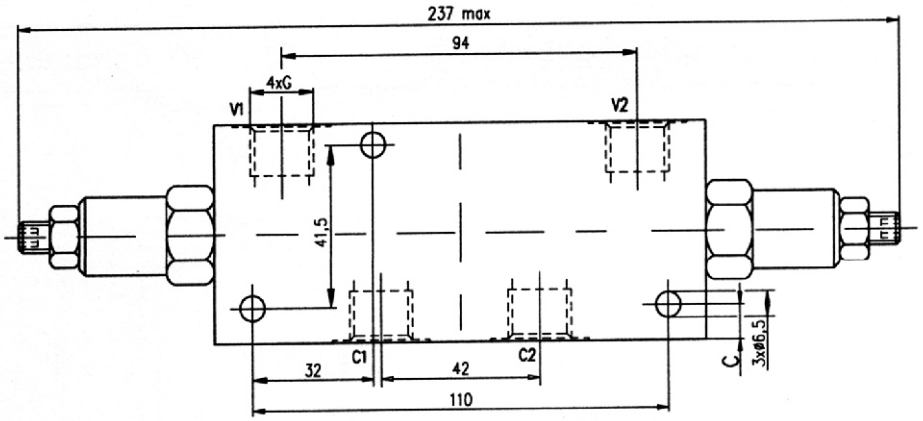

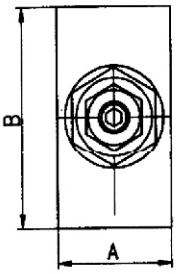

OWC-SE/L...

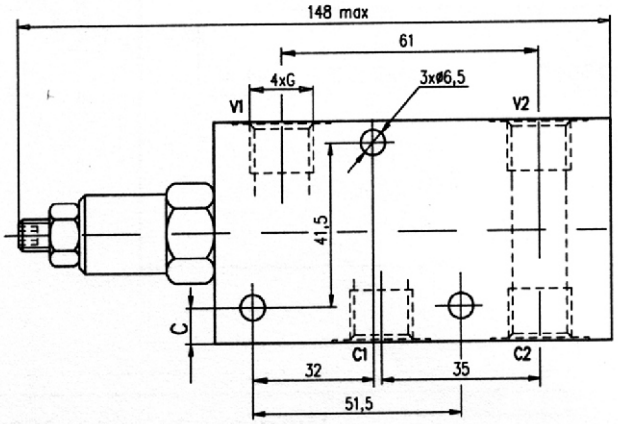

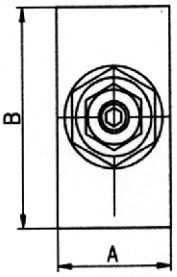

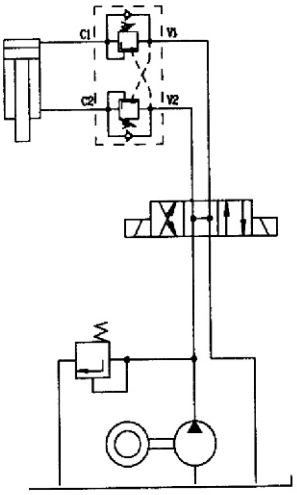

Type	P_{nom}	Q_{nom}	P_p/P_u	G	A	B	C
	bar	l/min			mm		
OWC-DE/L 3/8"	200	35	4:1	G3/8"	30	56	9
OWC-DE/L 1/2"	200	35	4:1	G1/2"	38	65	13,5
OWC-SE/L 3/8"	200	35	4:1	G3/8"	30	56	9
OWC-SE/L 1/2"	200	35	4:1	G1/2"	38	65	13,5

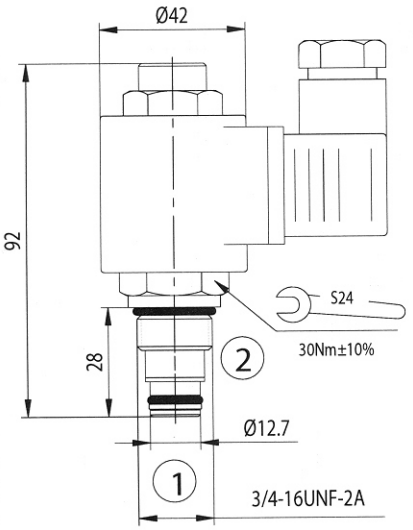

DESCRIPTION

A solenoid-operated, 2-way, piloted, poppet-type, normally open, screw-in, hydraulic cartridge valve designed for low leakage in load-holding applications.

OPERATION

When de-energized, the EV06-2A allows flow from 2 to 1. Flow from 1 to 2 is severely restricted in this mode.

When energized, the valve's poppet closes on its seat, blocking flow from 2 to 1. In this mode the cartridge will allow 1 to 2 flow after overcoming the solenoid force.

RATINGS

Operating Pressure: 250 bar
Flow: See Performance Chart
Internal Leakage: 0.25 cc/minute max. at 250 bar
Temperature: -20 to 90°C with standard Buna N seals
Coil Duty Rating: Continuous from 85 % to 115 % of nominal voltage
Minimum Pull-in Voltage: 85 % of nominal at 250 bar
Filtration: Recommend 25 µm nominal or better
Fluids: Mineral-based or synthetics with lubricating properties at viscosities of 7.4 to 420 cSt
Installation: No restrictions
Cavity: CC06-2; See page 8.2.01

SYMBOL

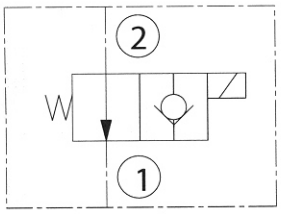

CAVITY

See page 8.2.01

TO ORDER

EV06-2A

Voltage	Seals
0 - Without coil	N - Buna N
12 - 12 V DC	V - Viton A
24 - 24 V DC	
11 - 110V RAC	
22 - 220V RAC	

Terminations DIN 43650 See page 8.1.01

PERFORMANCE (Carttridge Only)

From 2 to 1
32cSt oil at 40°C

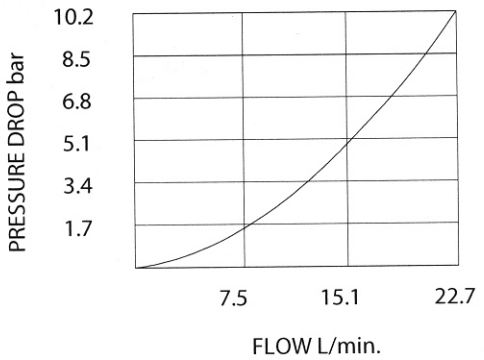

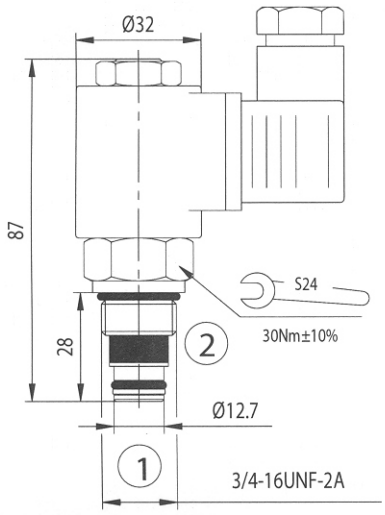

DESCRIPTION

A solenoid-operated, 2-way, normally closed, piloted poppet-type, screw-in hydraulic cartridge valve, intended to act as a blocking or load-holding device for low flow circuits.

OPERATION

When de-energized, the EV56-2B acts as a check valve, allowing flow from 1 to 2, while blocking flow from 2 to 1.

When energized, the cartridge's poppet lifts to open the 2 to 1 flow path. In this mode, flow from 1 to 2 is severely restricted.

RATINGS

Operating Pressure: 200 bar
Flow: See Performance Chart
Internal Leakage: 0.25 cc/minute max. at 200 bar
Temperature: -20 to 90°C with standard Buna N seals
Coil Duty Rating: Continuous from 85 % to 115 % of nominal voltage
Minimum Pull-in Voltage: 85 % of nominal at 200 bar
Filtration: Recommend 25 µm nominal or better
Fluids: Mineral-based or synthetics with lubricating properties at viscosities of 7.4 to 420 cSt
Installation: No restrictions
Cavity: CC06-2; See page 8.2.01

SYMBOL

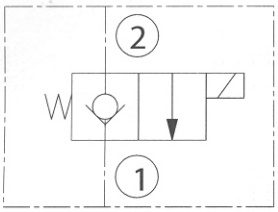

CAVITY

See page 8.2.01

TO ORDER

EV56-2B

Voltage	Seals
0 - Without coil	N - Buna N
12 - 12 V DC	V - Viton A
24 - 24 V DC	
11 - 110V RAC	
22 - 220V RAC	

Terminations DIN 43650 See page 8.1.01

PERFORMANCE (Cartridge Only)

From 2 to 1

32cSt oil at 40°C

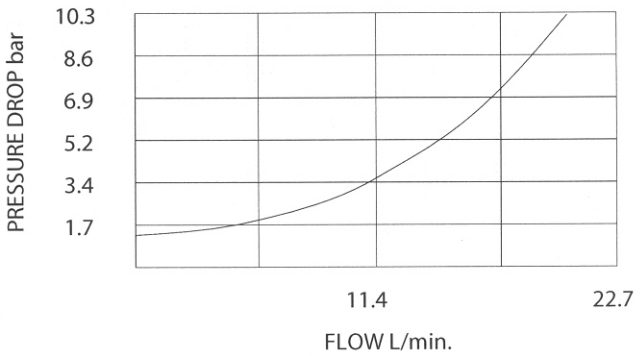

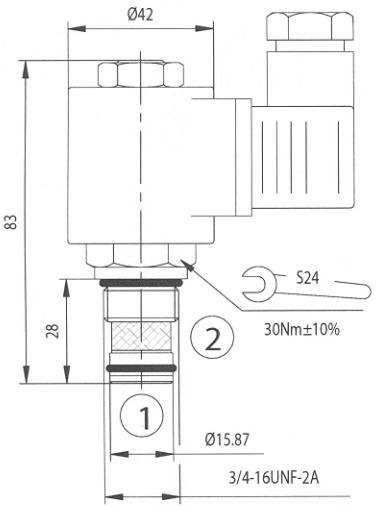

DESCRIPTION

A solenoid-operated, 2-way, normally closed, piloted poppet-type, screw-in hydraulic cartridge valve, intended to act as a blocking or load-holding device for low flow circuits.

OPERATION

When de-energized, the EV08-2B acts as a check valve, allowing flow from 1 to 2, while blocking flow from 2 to 1.

When energized, the cartridge's poppet lifts to open the 2 to 1 flow path. In this mode, flow from 1 to 2 is severely restricted. If this path is required, see model EV08-2E, page 1.5.03

RATINGS

Operating Pressure: 250 bar
Flow: See Performance Chart
Internal Leakage: 0.25 cc/minute max. at 250 bar
Temperature: -20 to 90°C with standard Buna seals
Coil Duty Rating: Continuous from 85 % to 115 % of nominal voltage
Minimum Pull-in Voltage: 85 % of nominal at 250 bar
Filtration: Recommend 25 µm nominal or better
Fluids: Mineral-based or synthetics with lubricating properties at viscosities of 7.4 to 420 cSt
Installation: No restrictions
Cavity: CC08-2; See page 8.2.01

SYMBOL

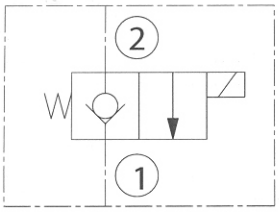

CAVITY

See page 8.2.01

TO ORDER

EV08-2B

Voltage	Seals
0 - Without coil	N - Buna N
12 - 12 V DC	V - Viton A
24 - 24 V DC	
11 - 110V RAC	
22 - 220V RAC	

Terminations DIN 43650 See page 8.1.01

PERFORMANCE (Cartridge Only)

From 2 to 1

32cSt oil at 40°C

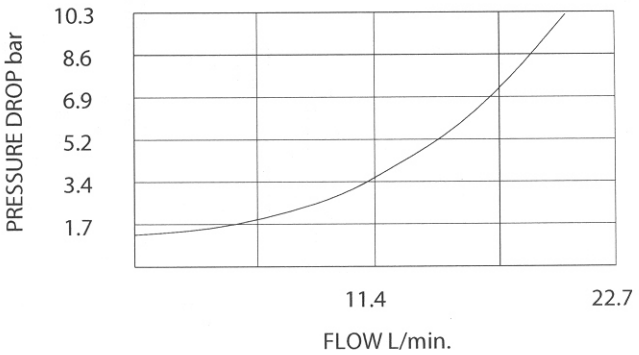

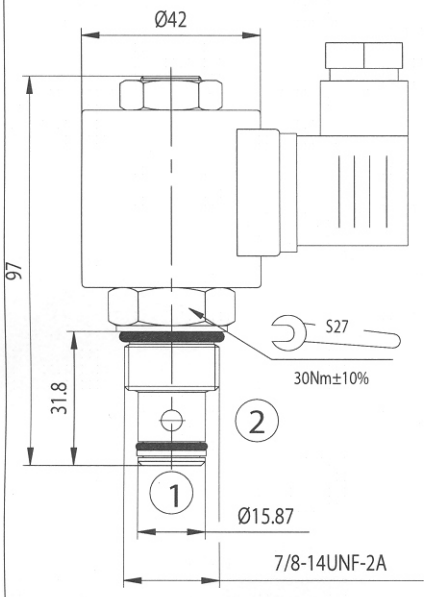

DESCRIPTION

A solenoid-operated, 2-way, normally closed, poppet-type, screw-in hydraulic cartridge valve, designed to function as a load holding or blocking valve in applications requiring low internal leakage.

OPERATION

When de-energized, the EV10-2B acts as a check valve, allowing flow to pass from 1 to 2, while blocking flow in the reverse direction.
When energized, the poppet lifts to open the 2 to 1 flow path. In this mode, flow from 1 to 2 is severely restricted. If this path is required, see model EV10-2E, page 1.5.04

RATINGS

Operating Pressure: 210 bar
Flow: See Performance Chart
Internal Leakage: 0.25 cc/minute max. at 210 bar
Temperature: -20 to 90°C with standard Buna seals
Coil Duty Rating: Continuous from 85 % to 115 % of nominal voltage
Minimum Pull-in Voltage: 85 % of nominal at 210 bar
Filtration: Recommend 25 µm nominal or better
Fluids: Mineral-based or synthetics with lubricating properties at viscosities of 7.4 to 420 cSt
Installation: No restrictions
Cavity: CC10-2; See page 8.2.04

SYMBOL

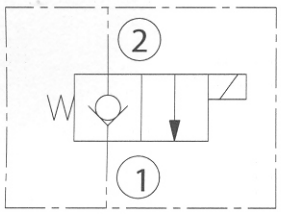

CAVITY

See page 8.2.04

TO ORDER

EV10-2B

Voltage	Seals
0 - Without coil	N - Buna N
12 - 12 V DC	V - Viton A
24 - 24 V DC	
11 - 110V RAC	
22 - 220V RAC	

Terminations DIN 43650 See page 8.1.01

PERFORMANCE (Cartridge Only)

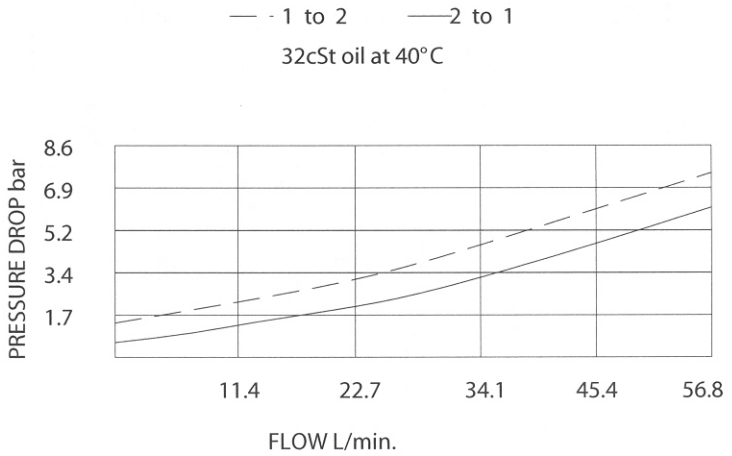

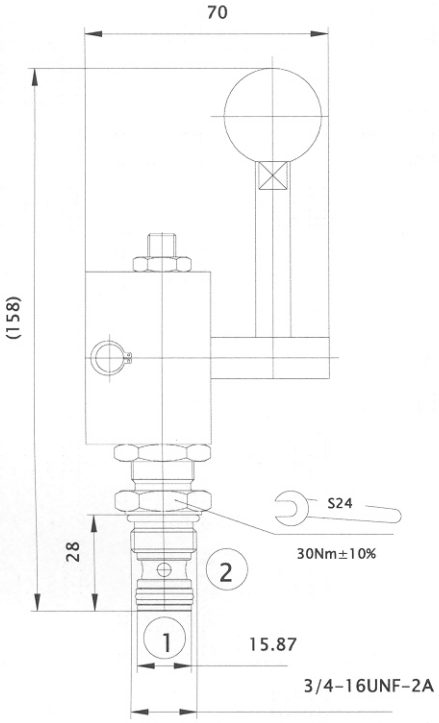

SYMBOL

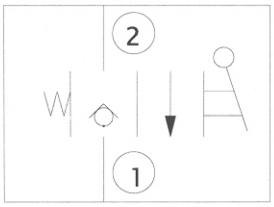

DESCRIPTION

A manual, 2-way, pull-to-open, screw-in hydraulic directional valve.

OPERATION

The MV08-2B-A blocks flow from 2 to 1 until an operator pulls the lever outward.

Note: Port 1 is intended to be a tank port only.

RATINGS

Operating Pressure: 250 bar
Flow: See Performance Chart
Internal Leakage: 0.25 cc/minute max. at 250 bar
Temperature: -20 to 90°C with standard Buna seals
Filtration: Recommend 10 µm nominal or better
Installation: No restrictions
Cavity: CC08-2; See page 8.2.01

CAVITY

See page 8.2.01

TO ORDER

MV08-2B-A

Seals

N - Buna N
V - Viton A

PERFORMANCE (Cartridge Only)

From 2 to 1

32cSt oil at 40°C

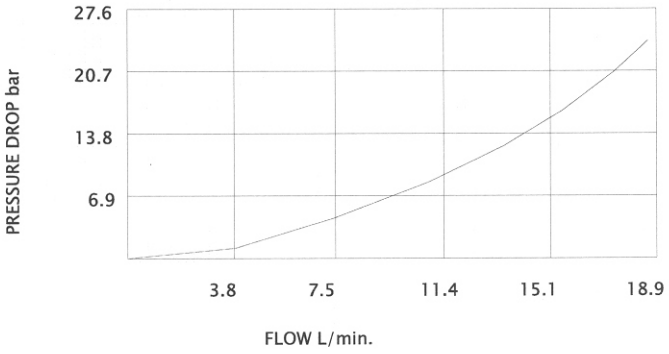

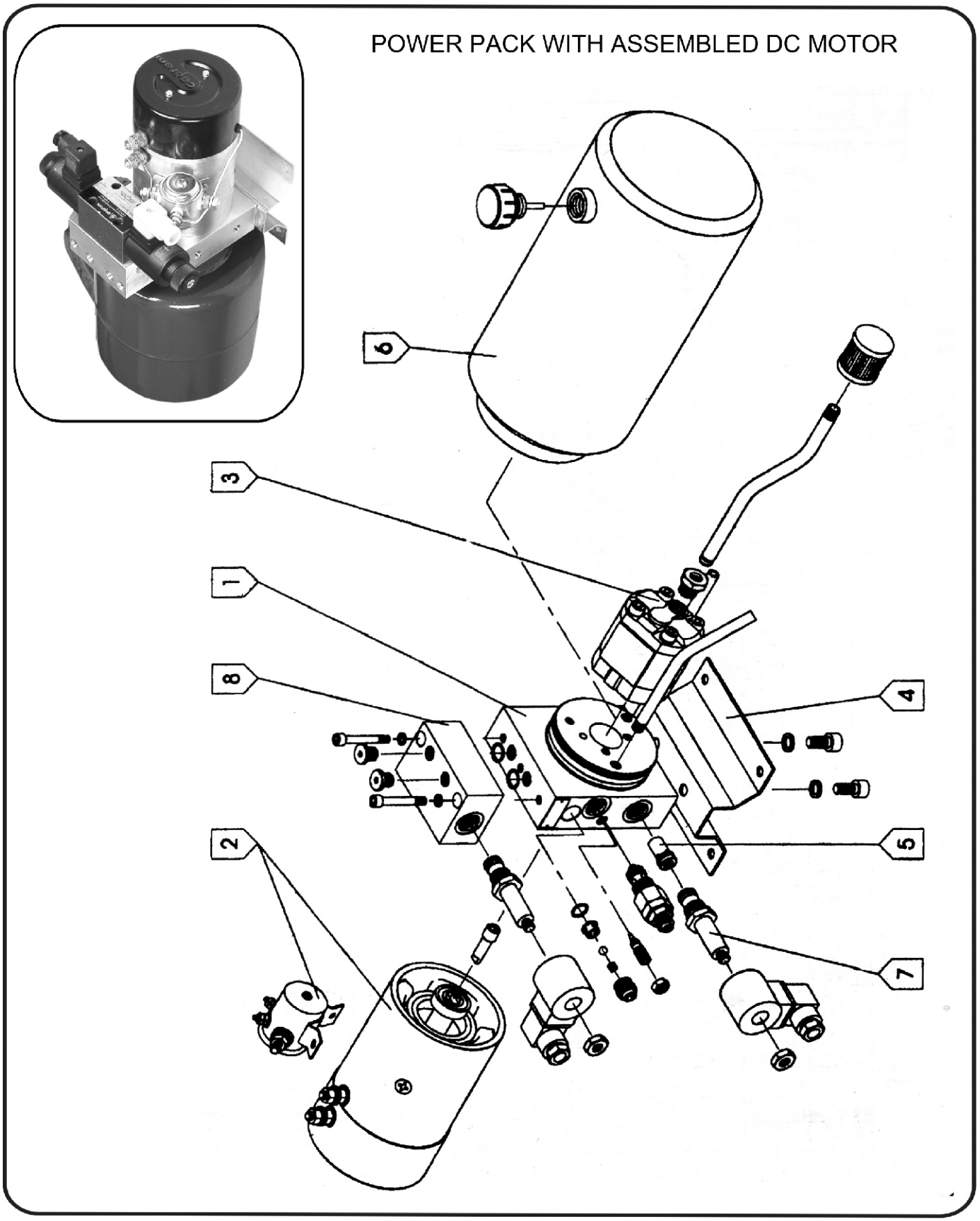
POWER PACK WITH ASSEMBLED DC MOTOR
6
3
1
8
4
5
2
7

CENTRAL BLOCK – PRESSURE RANGE

CODE	A	B	C	D	E	F	G	H
PRESSURE RANGE	50	75	100	125	150	175	200	225

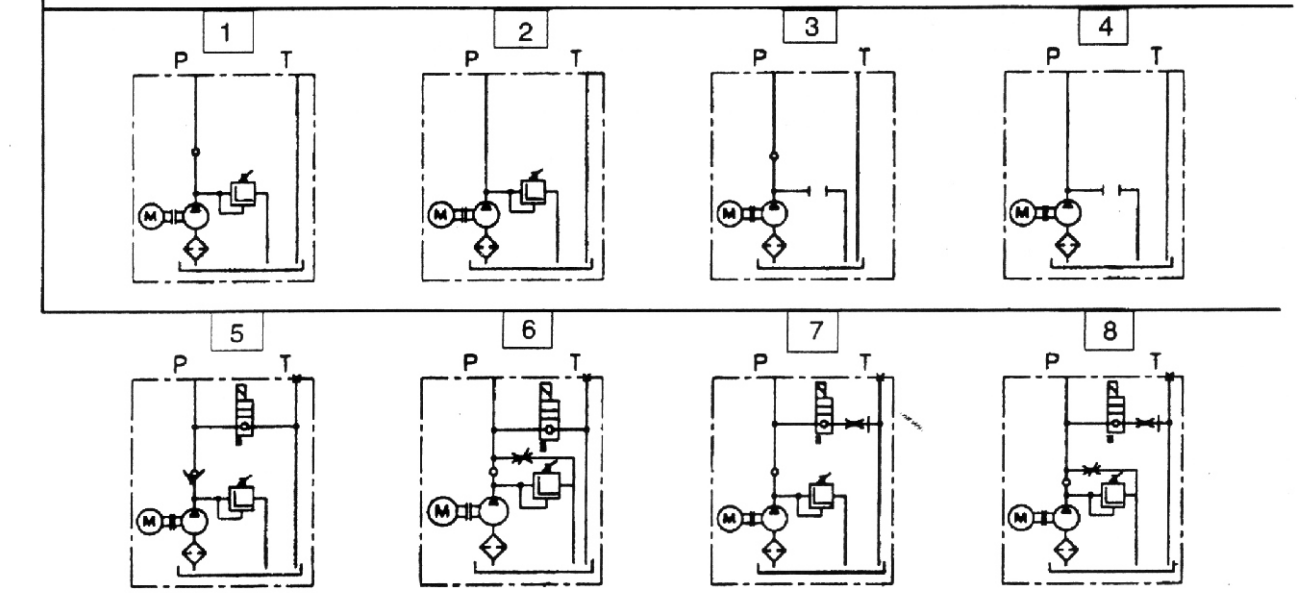

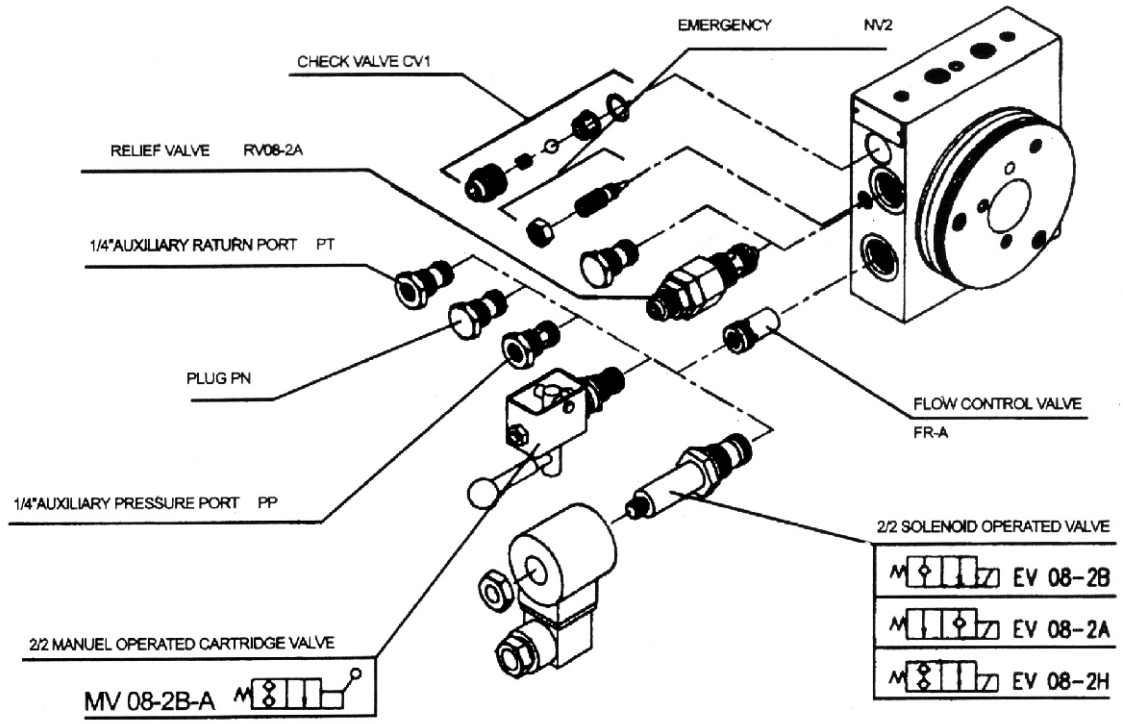

ELECTRIC MOTORS – STARTING RELAY

	N [kW]	U [V]	A [mm]	B [mm]	C [mm]	N [kW]	U [V]	A [mm]	B [mm]	C [mm]
n=1500 rpm	0.55	220	158	240	120	0.55	220/380	158	240	120
	0.75		158	240	120	0.75		158	240	120
	1.1		179	255	130	1.1		179	255	120
	1.5		179	280	130	1.5		179	280	120
	2.2		179	280	130	2.2		179	280	120
						3.0		179	280	120
n=3000 rpm	0.75	220	158	240	120	0.75	220/380	158	240	120
	1.1		158	240	120	1.1		158	240	120
	1.5		179	255	122	1.5		179	255	122
	2.2		179	280	122	2.2		179	280	122
						3.0		179	280	122

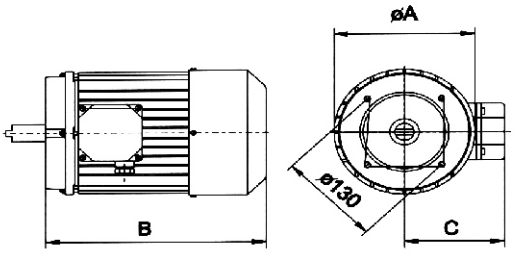

A.C.threephase motors 220/380V 50Hz construction shape B14
A.C.singlephase motors 220V 50Hz construction shape B14

N [kW]	U [V]	D [mm]	L [mm]
0.8	12	81	161
1.5	12	114	175
2.0	12	114	175
3.0	12	125	213
0.8	24	81	161
1.5	24	114	175
2.0	24	114	175
3.0	24	125	213

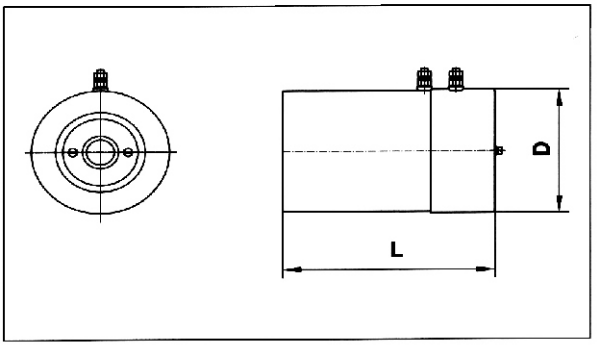

N	Y
Without relay	With relay

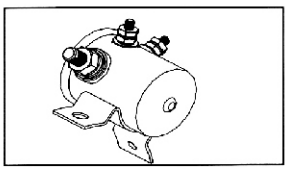

N	Y
Without	With

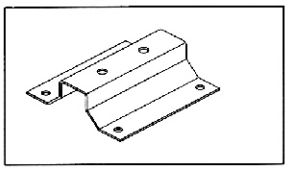

GEAR PUMPS

cc/rev.	1.0	1.25	1.6	2.0	2.5	3.15	3.65	4.2	5.0	5.7	6.1

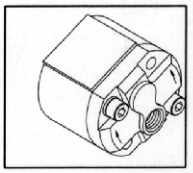

C

Code	Vol. [L]
1	1
2	2
3	3
5	5
8	8
12	12

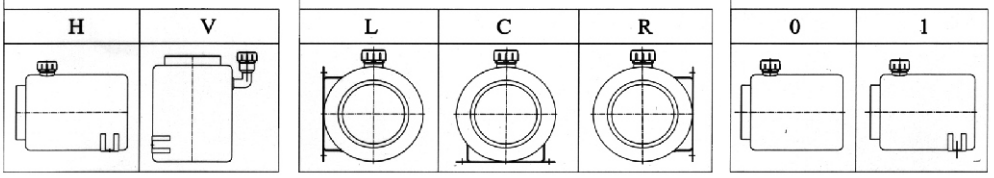

Code	Volume [L]	Dimensions				
		A [mm]	B [mm]	C [mm]	D [mm]	E [mm]
C1	1	114	143	160		50
C2	2	140	169	225		70
C3	3	160	189	225		80
C4	5	160	189	325		80
C5	8	200	229	325	255	100
C6	12	200	229	430	360	100

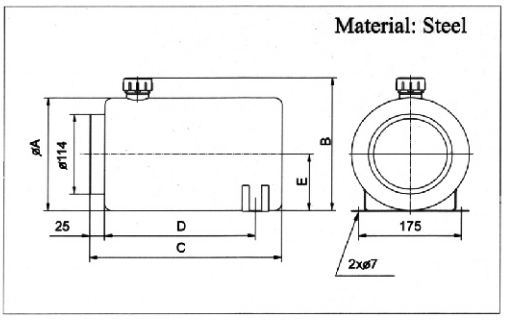

P

Code	Vol. [L]
2	2
3	3
5	5

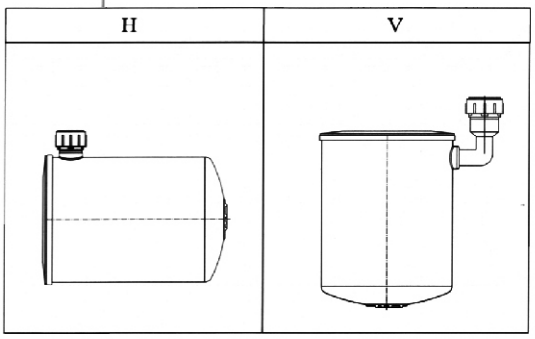

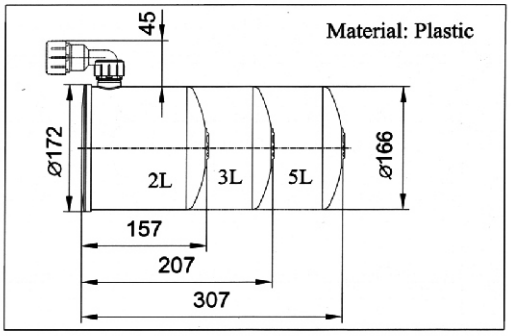

B

Code	Volume [L]	Dimensions				
		B [mm]	C [mm]	D [mm]	E [mm]	F [mm]
B12	12	262	280	250	200	275
B15	15	262	350	320	200	275
B20	20	262	350	320	200	385
B30	30	300	460	410	230	341
B45	45	300	460	410	230	491
B60	60	370	460	410	300	491

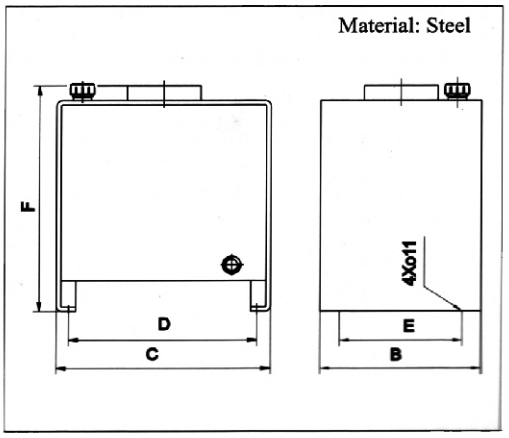

Solenoid	Solenoid
Without	110V,50Hz AC
12V DC	220V,50Hz AC
24V DC	220V RAC

Threads
G 1/4"
G 3/8"

Scheme	Drawing
W01,W02	
W03	
W04	
W05	
W06	
W07	
W08	

Scheme	Drawing
W09	
W10	
E01	
E02	
E03	
E04	
E05	

Scheme	Drawing
E06	
E07	
E08	
E09	
E10	
E11	
E12	

kode	diagrams	kode	diagrams
00		18	
01		20	
02		21	
04		24	
05		26	
06		27	
08		28	
10		32	
12		34	
13		39	
16		42	
17		45	

drawing

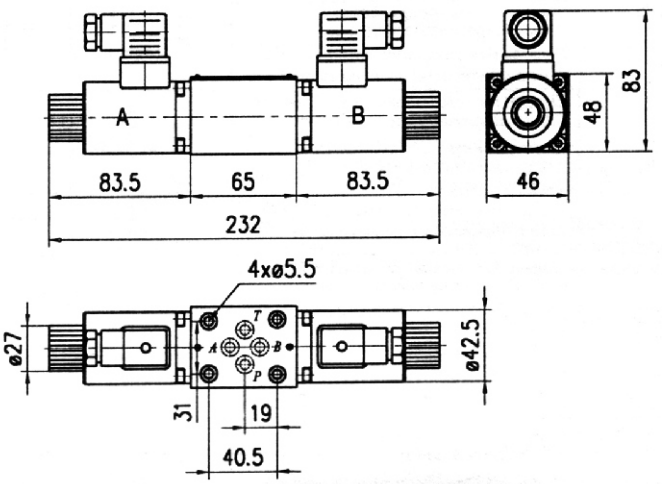

order example

HPP-M 7F 12A 15 Y D C4HC0 EC0D W01E110D1W0304 1

1 2 3 4 5 6 7 8

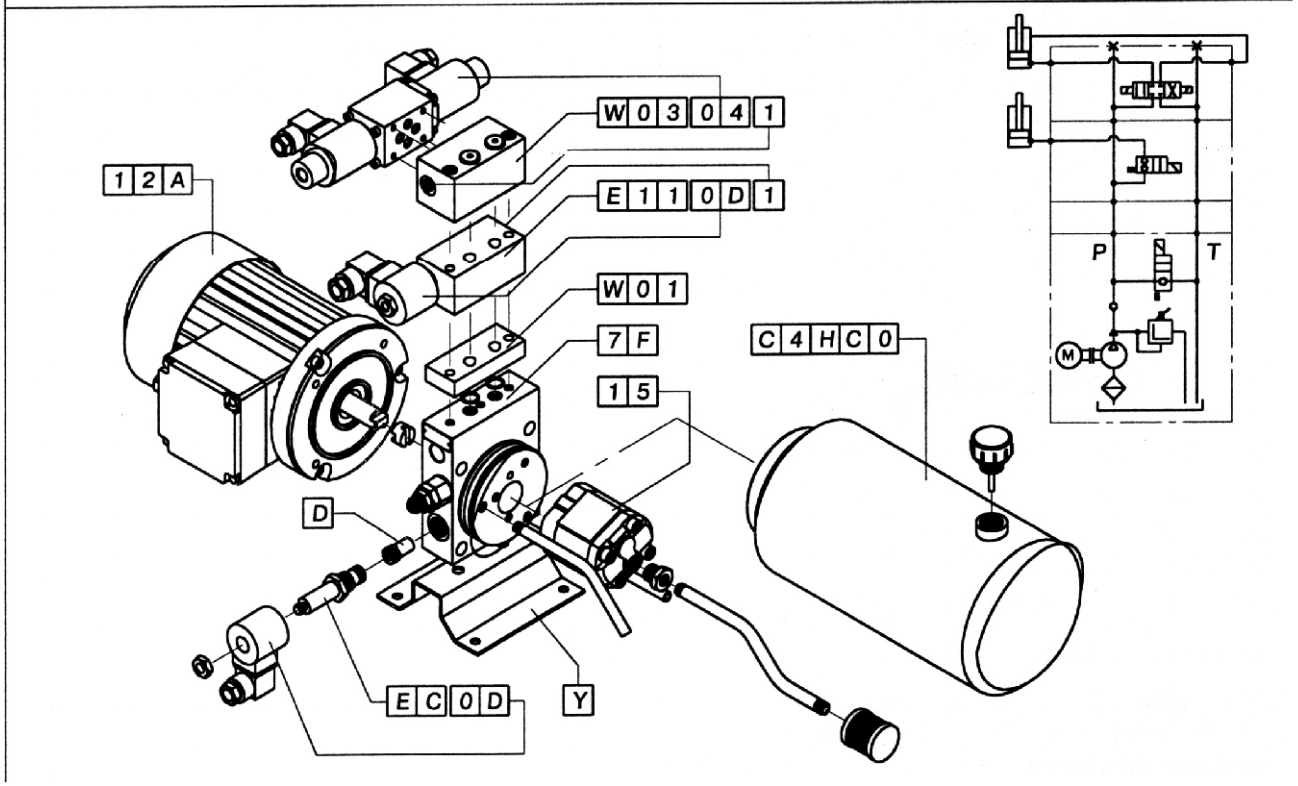

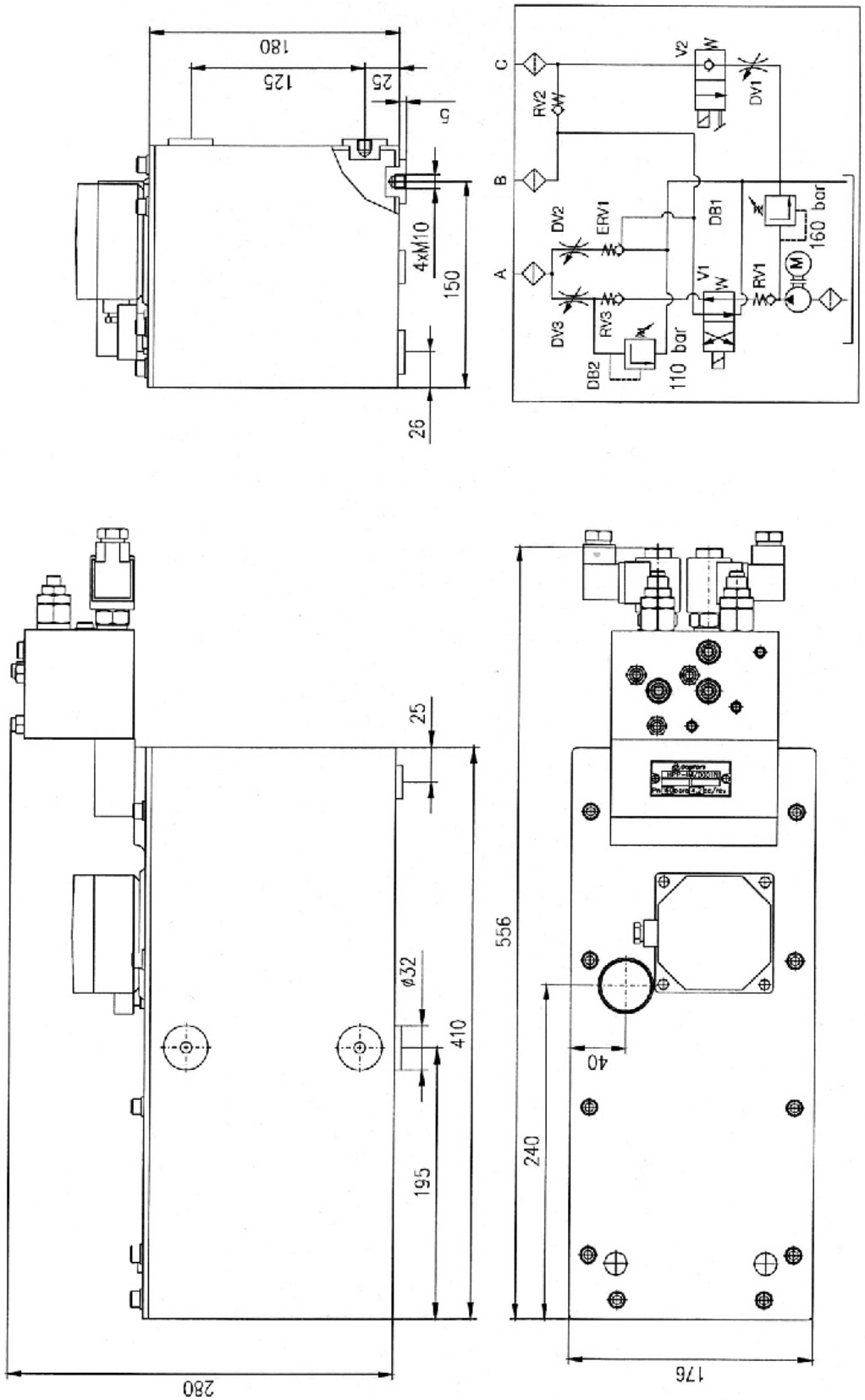

TANK
Volume 3l
plastic

PUMP
Geometrical volume 1,25cc/rev.
Working pressure 40bar.
Flow 1,7l/min

MOTOR
Voltage 220/380V AC
Power 0,37kW
n=1500 r.p.m

MINI POWER PACK MPP-M1/1063/*MINI GÜÇ ÜNİTESİ MPP-M1/1063*

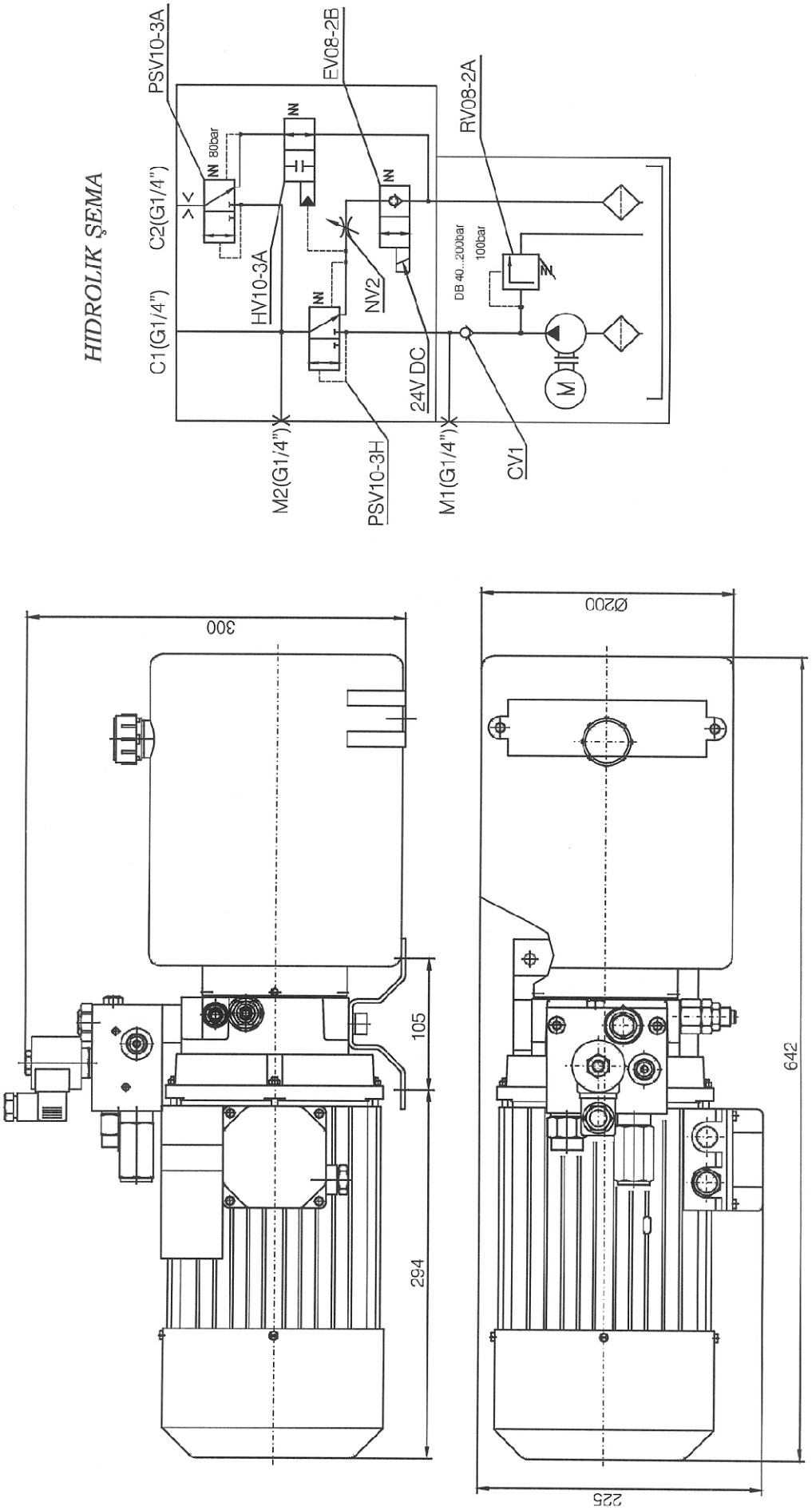

TANK/*TANKI*
Volume/*Kapasite* 6l

PUMP/*POMPA*
Geometrical volume/*Geometrik hacmi* 3,65cc/rev.
Working pressure/*Çalışma basinç* 100bar.

MOTOR
Voltage/*Voltaj* 220V AC
Power/*Kuvvet* 1,1kW
n=1420r.p.m

MINI POWER PACK MPP-M1/1294

Hydraulic scheme

Electric installing scheme

MOTOR
Voltage 24 V DC
Power 1.5 kW
Speed 2700

PUMP
Geometrical volume 2 cc/rev
Working pressure 150 bar
Flow 5.2 l/min

TANK
Volume 3 L

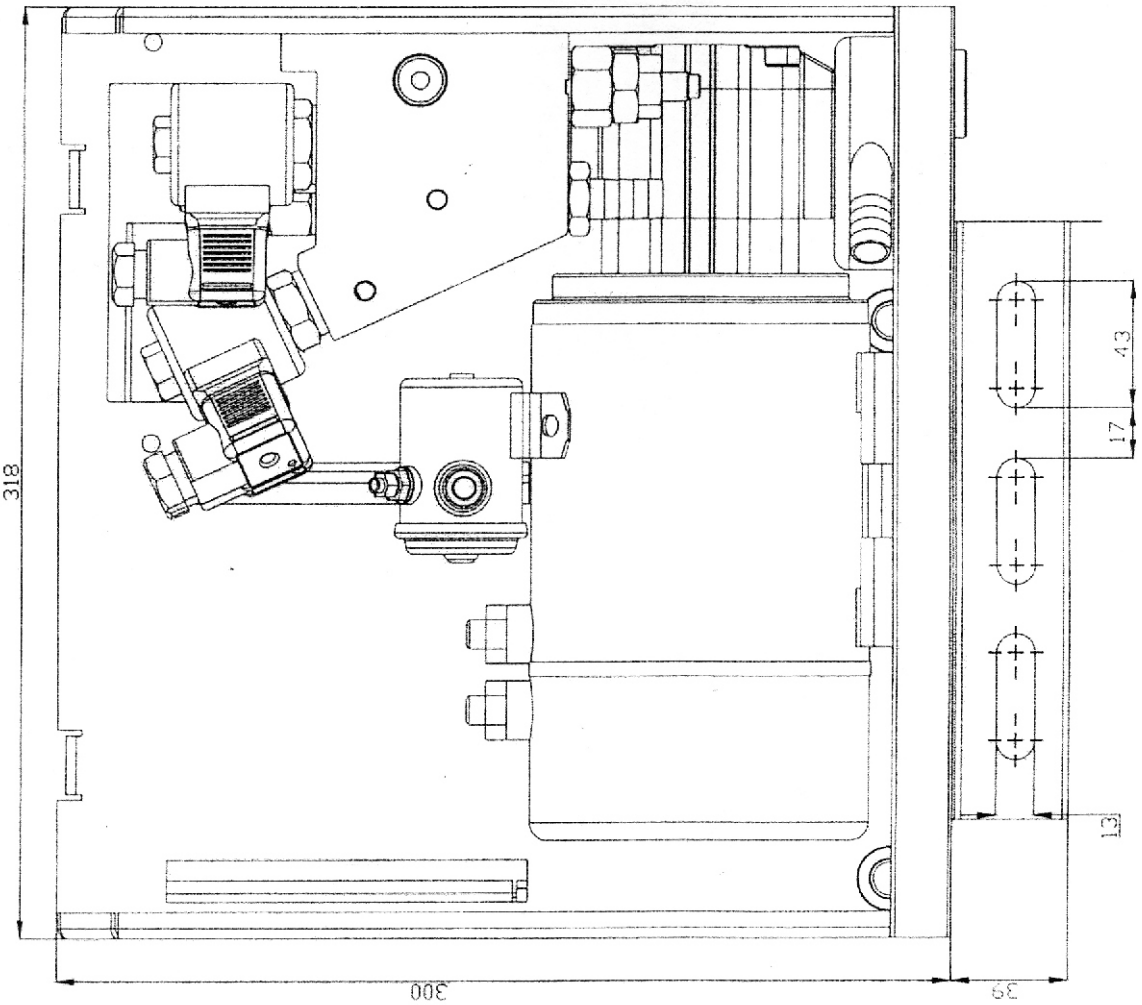

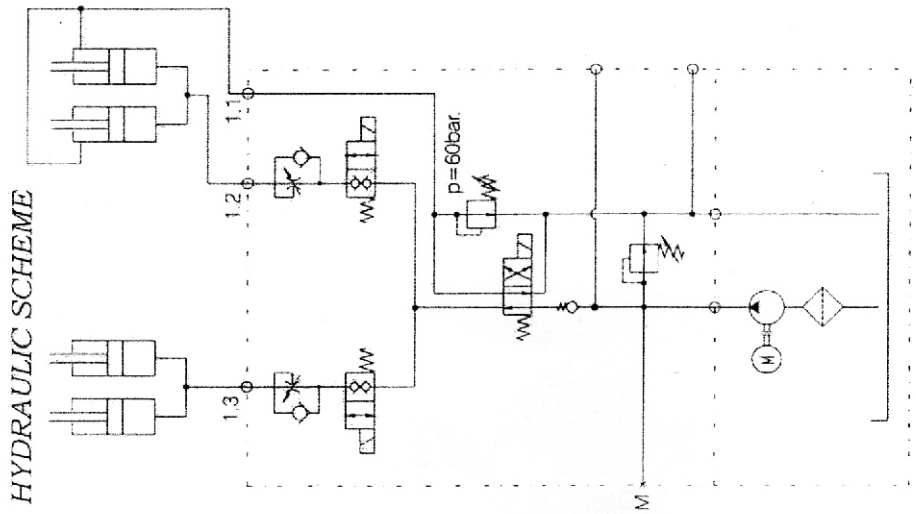

TANK
Volume 7l

PUMP
Geometrical volume 1,6cc/rev.
Working pressure 185bar.

MOTOR
Voltage 24V DC
Power 2kW

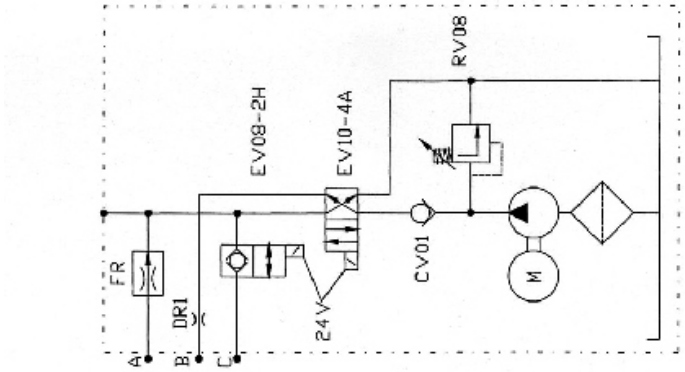

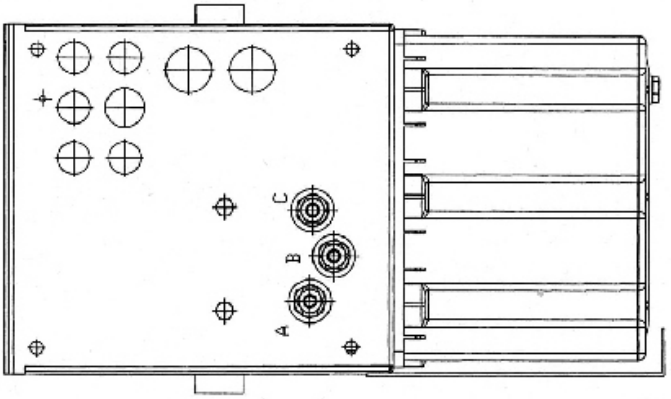

TANK
Volume 9l

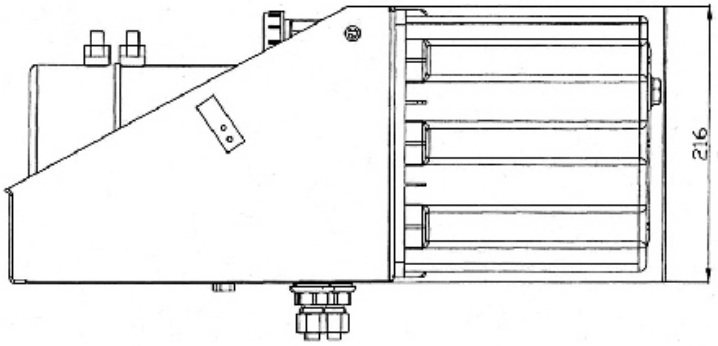

PUMP
Geometrical volume 2cc/rev.
Working pressure 250bar.

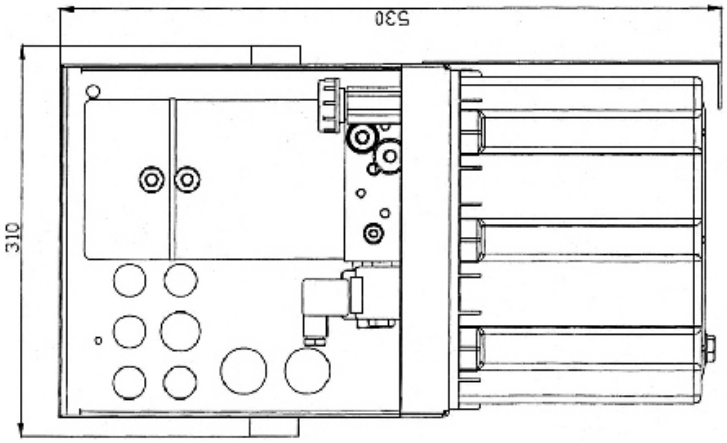

MOTOR
Voltage 24V DC
Power 2kW

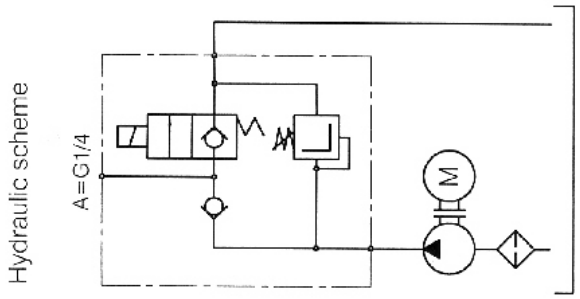

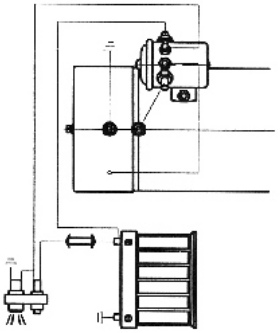

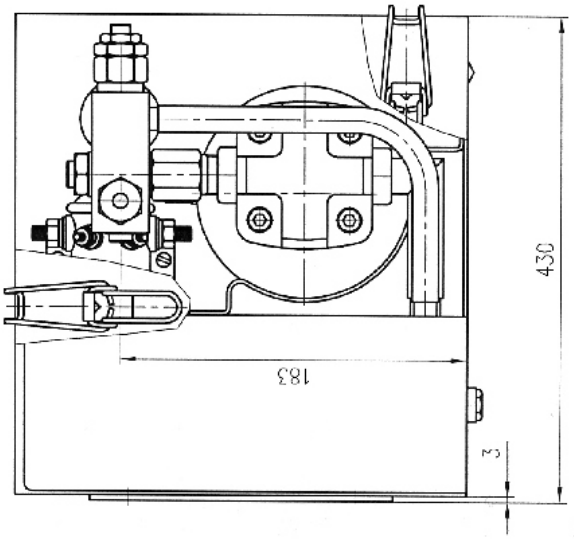

HC-24-D-MB-21-3.15-175

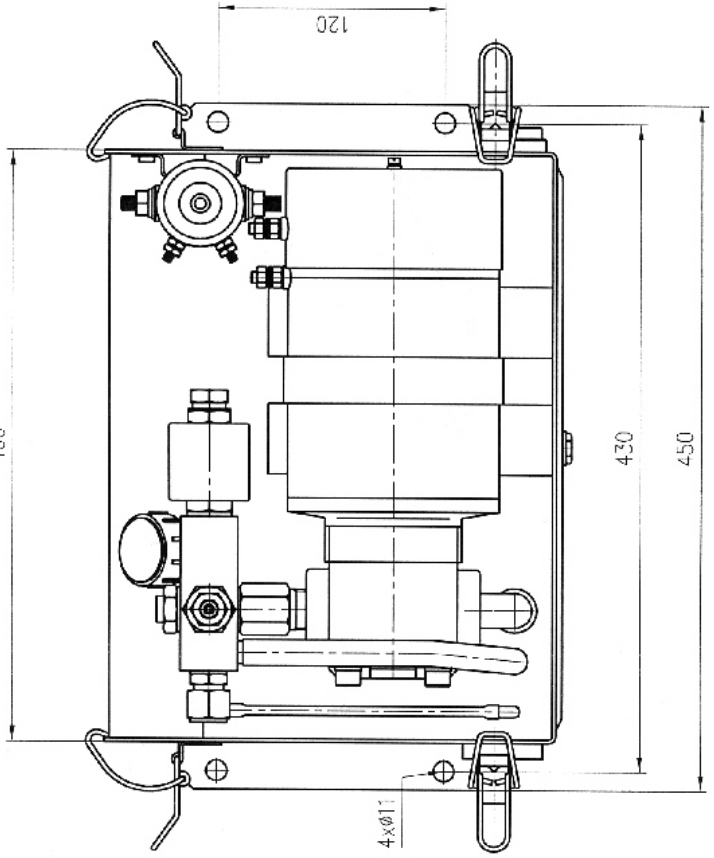

TANK
Volume 12 L

PUMP
Geometrical volume 3.15 cc/rev
Working pressure 175 bar

MOTOR
Voltage 24 V DC
Power 2 kW

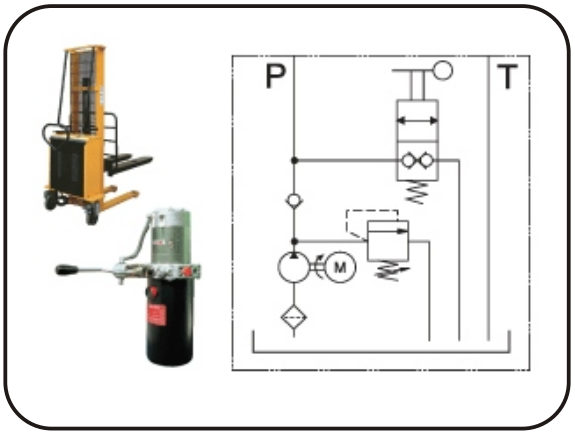
P
T
M

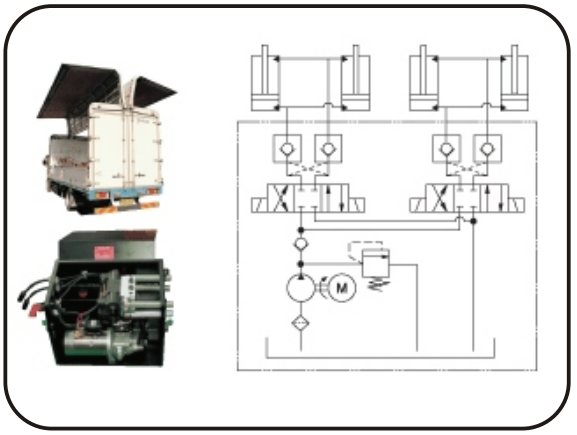
M

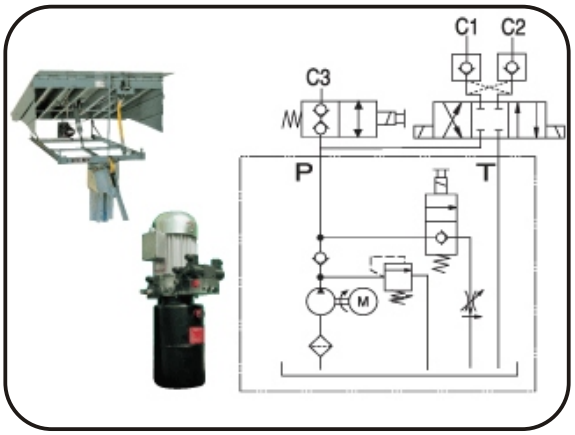
C1
C2
C3
P
T
M

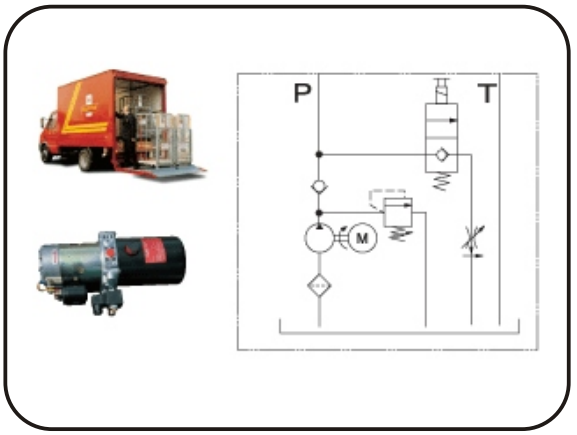
P
T
M

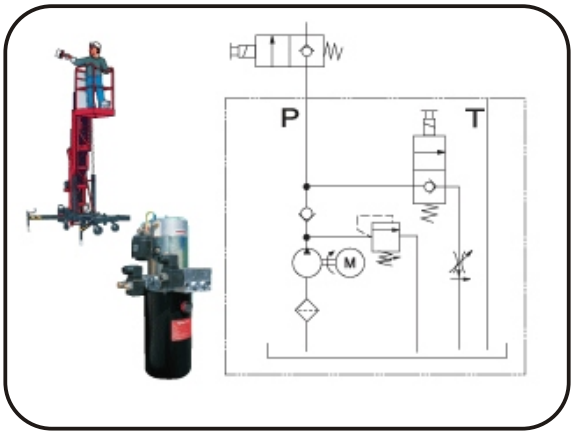
P
T
M

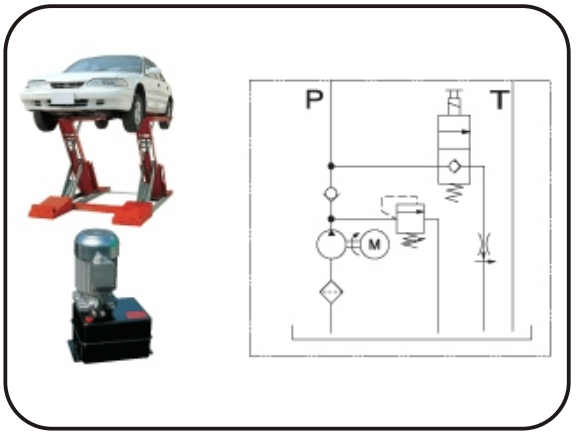
P
T
M

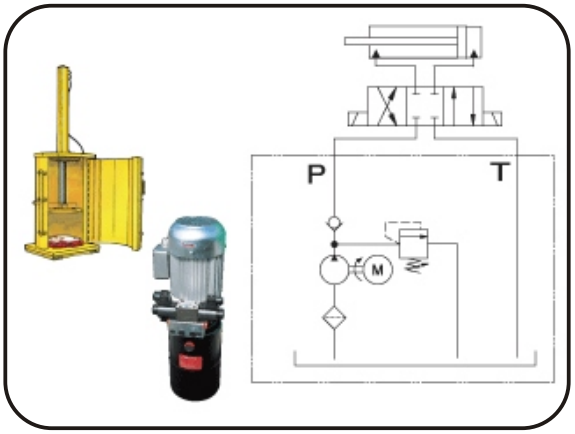
P
T
M

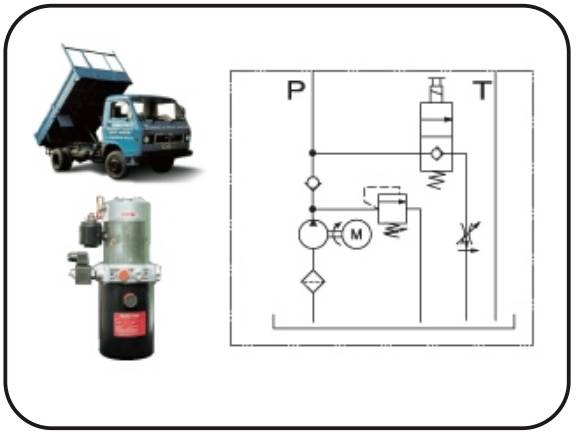
P
T
M

HYDRAULIC POWER PACK

UN ..

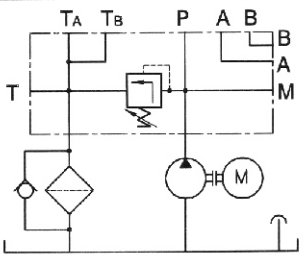

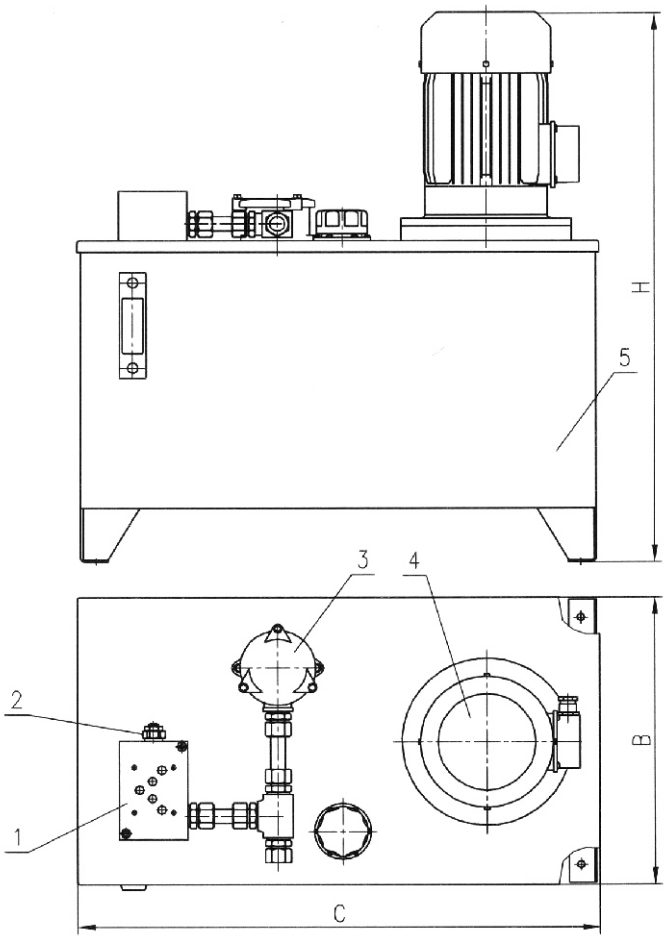

1. Hydraulic block.
2. Relief valve.
3. Filter.
4. Motor-pump
5. Tank.

PARAMETERS		TYPE			
		UN1	UN2	UN3/1	UN3/2
Nominal flow rate	*l/min*	16,2	22	28	32
Nominal pressure	*bar*	130	130	200	
Relief valve pressure adjustment	*bar*	160	160	220	
Motor power	*kW*	4	5,5	11	
Voltage	*V*	220/380			
Tank capacity	*l*	40	50	100	
Overall sizes BxHxC	*mm*	330x662x640	380x745x690	430x950x768	

ORDERING CODE

UN 1

- Type
- Code: **1, 2, 3/1 ,3/2**

DCM 0,8/1,2/30
DCM 0,8/2,4/30

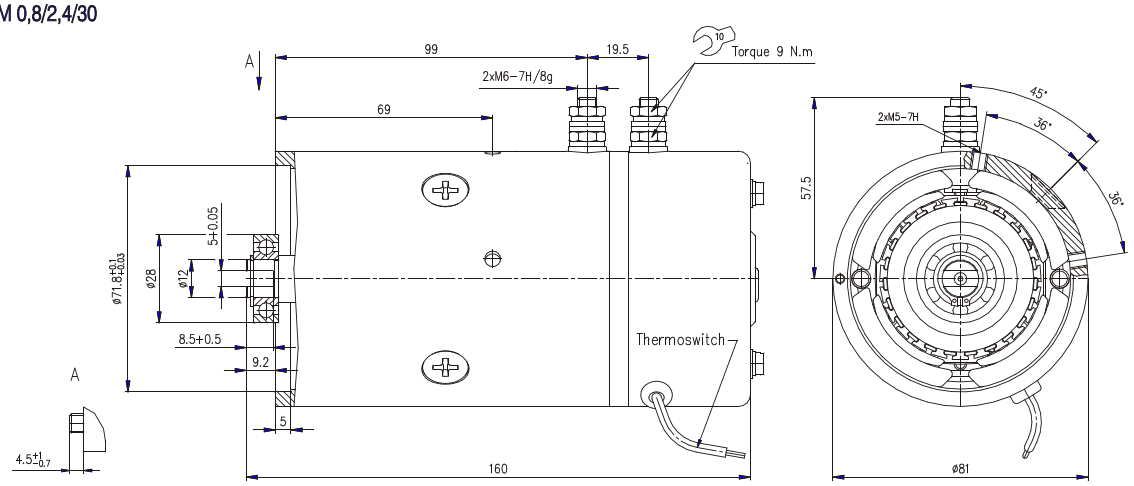

DCM 0,8/1,2/30

Rated Power	0.8 kW
Rated Voltage	12 V
Rated Current	110 A
Rated Speed	3000 min.$^{-1}$
Operation Mode	S2 - 1.5 min.
Excitation	Compaund
Protection	IP 44
Insulation	F
Weight	3.1 kg
Char. Curve	C12 A01
Rotation	C.W.D.E

Connection Diagram

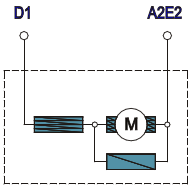

Design versions are adapted to standard assembly dimensions of hydraulic pumps and made according to special requirements of the customers

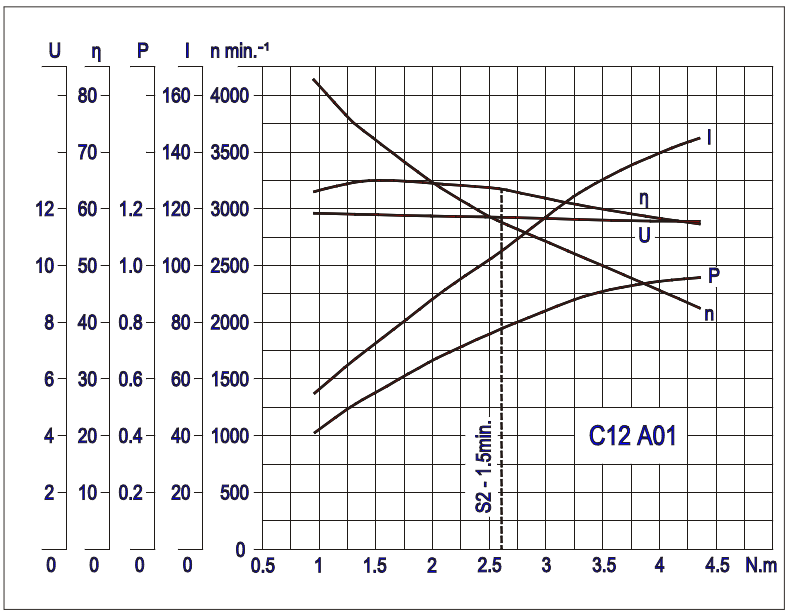

DCM 0,8/2,4/30

Rated Power	0.8 kW
Rated Voltage	24 V
Rated Current	58 A
Rated Speed	3000 min.$^{-1}$
Operation Mode	S2 - 1.5 min.
Excitation	Compaund
Protection	IP 44
Insulation	F
Weight	3.1 kg
Char. Curve	C24 B01
Rotation	C.W.D.E

Connection Diagram

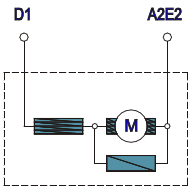

Design versions are adapted to standard assembly dimensions of hydraulic pumps and made according to special requirements of the customers

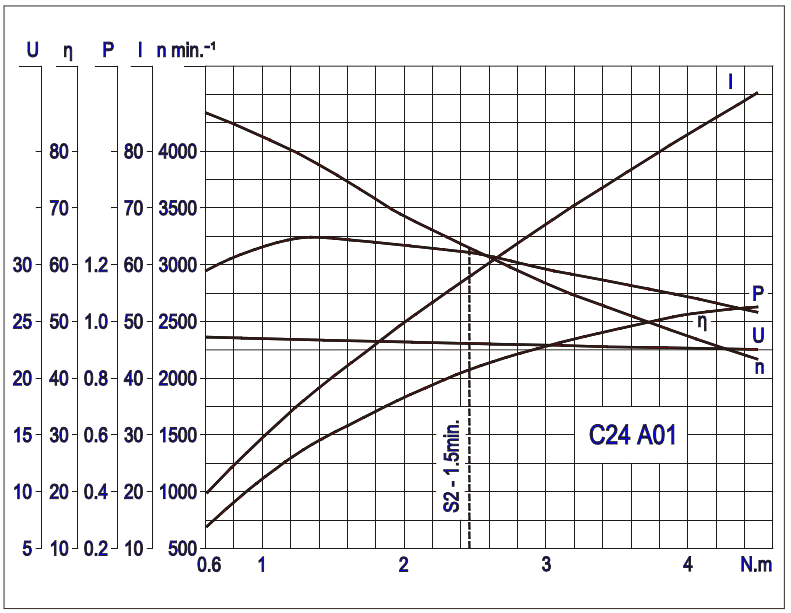

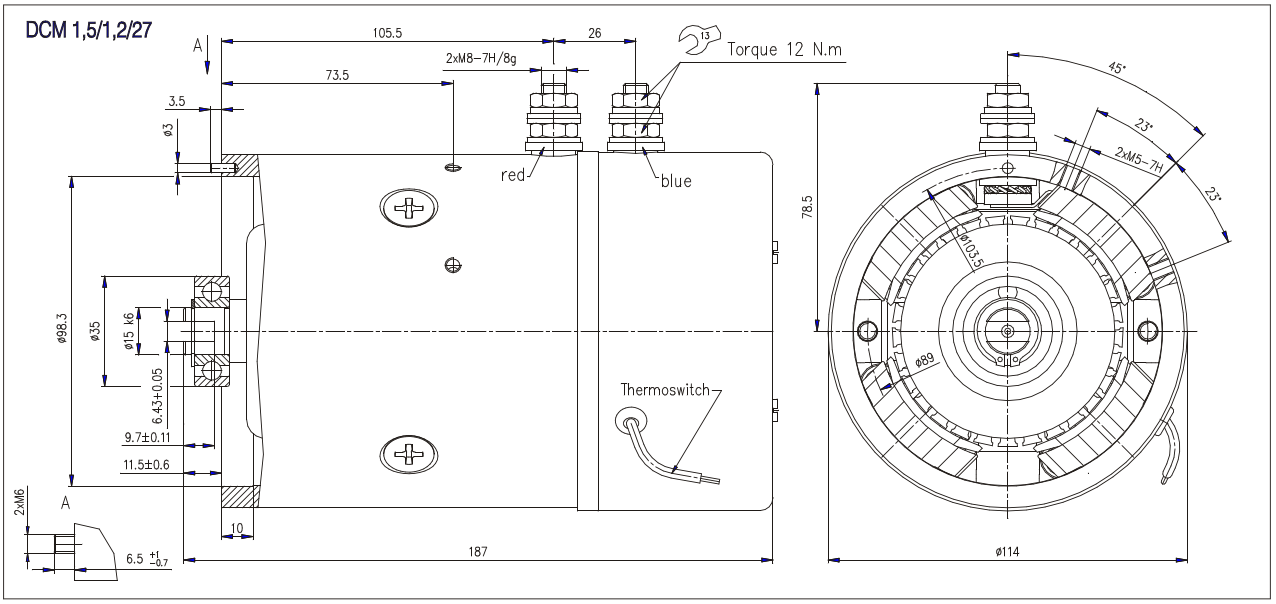

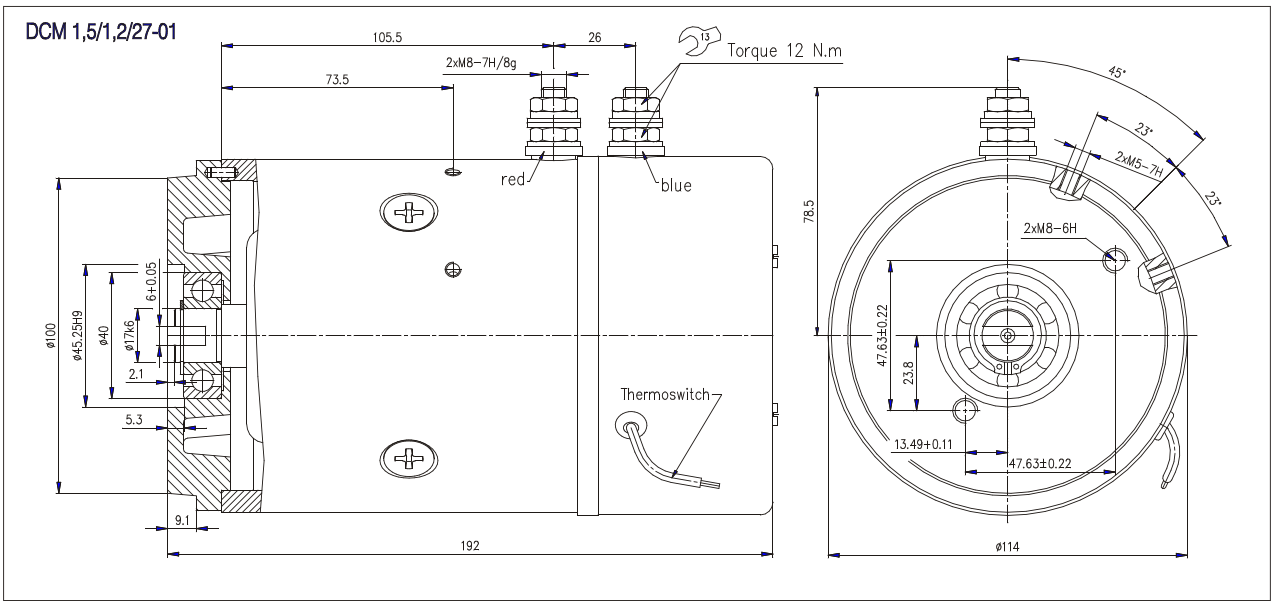

DCM 1,5/1,2/27
DCM 1,5/1,2/27-01

Rated Power	1,5 kW
Rated Voltage	12 V
Rated Current	180 A
Rated Speed	2700 min.$^{-1}$
Operation Mode	S2 - 4 min.
Excitation	Compound
Protection	IP 44
Insulation	F
Weight	6.8 kg / 7.1 kg
Char. Curve	C12 B01
Rotation	C.W.D.E

Connection Diagram

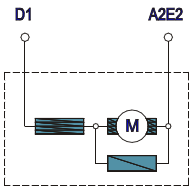

Design versions are adapted to standard assembly dimensions of hydraulic pumps and made according to special requirements of the customers

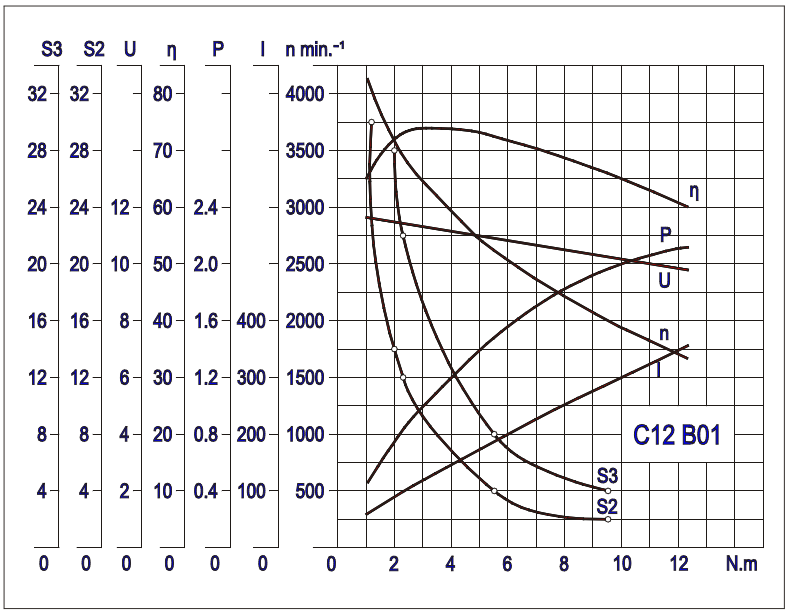

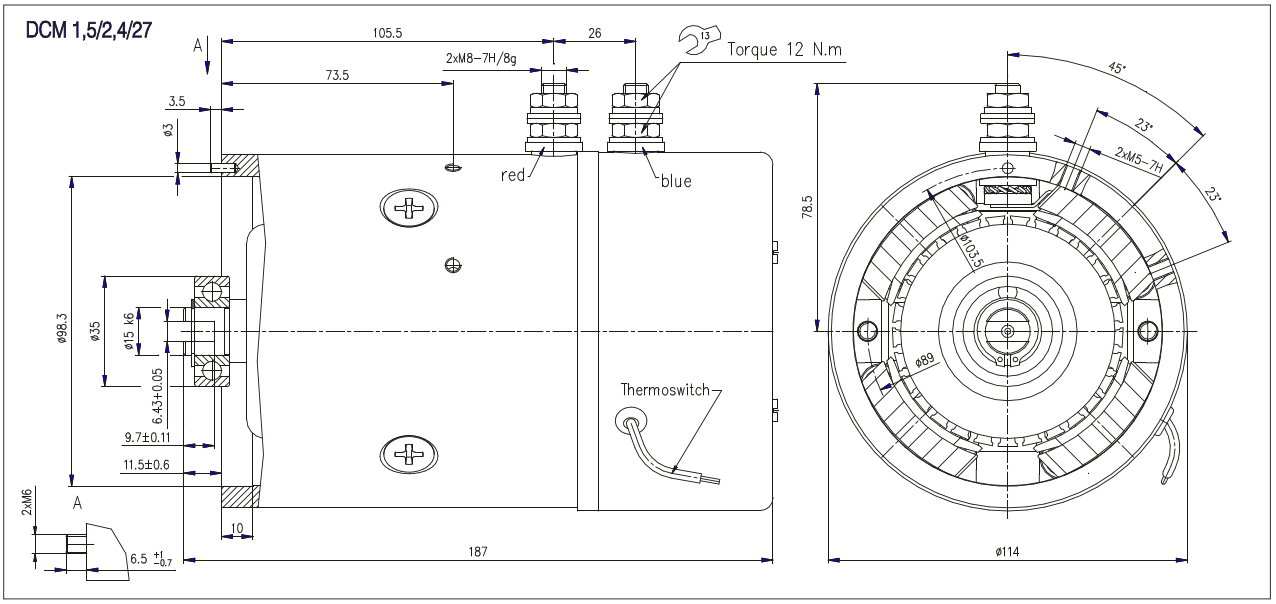

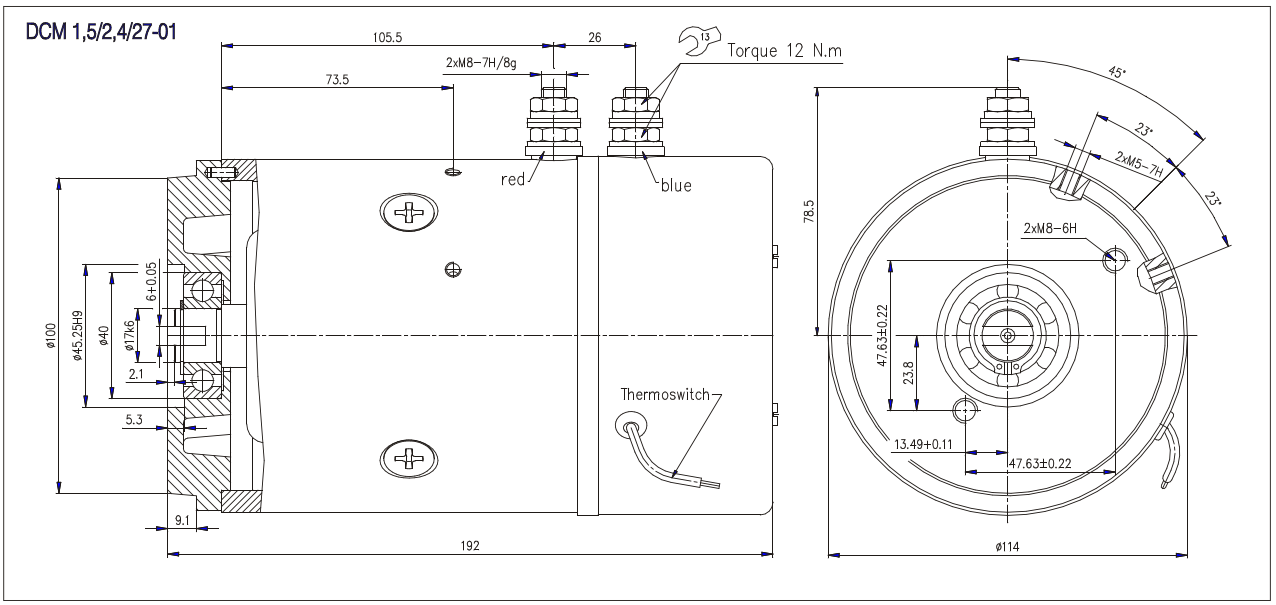

DCM 1,5/2,4/27
DCM 1,5/2,4/27-01

Rated Power	1.5 kW
Rated Voltage	24 V
Rated Current	90 A
Rated Speed	2700 min.$^{-1}$
Operation Mode	S2 - 5 min.
Excitation	Compaund
Protection	IP 44
Insulation	F
Weight	6.8 kg / 7.1 kg
Char. Curve	C24 B01
Rotation	C.W.D.E

Connection Diagram

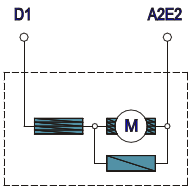

Design versions are adapted to standard assembly dimensions of hydraulic pumps and made according to special requirements of the customers

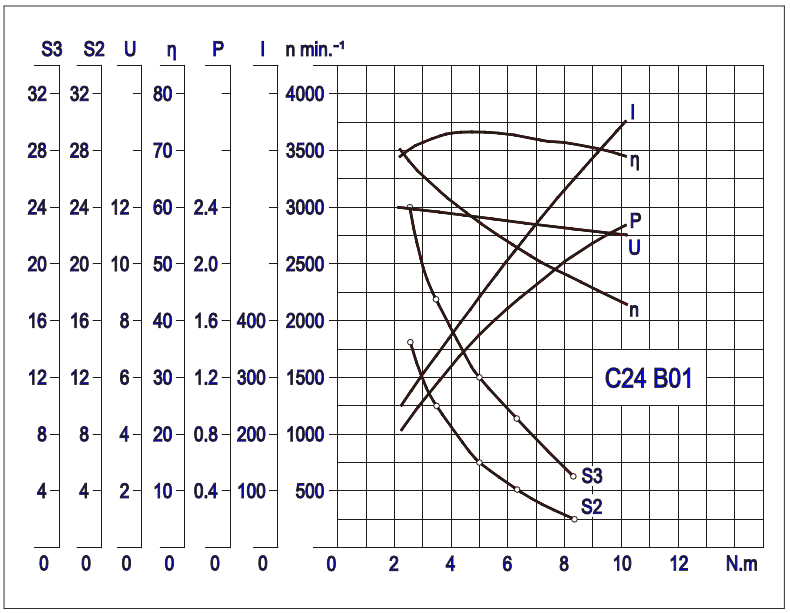

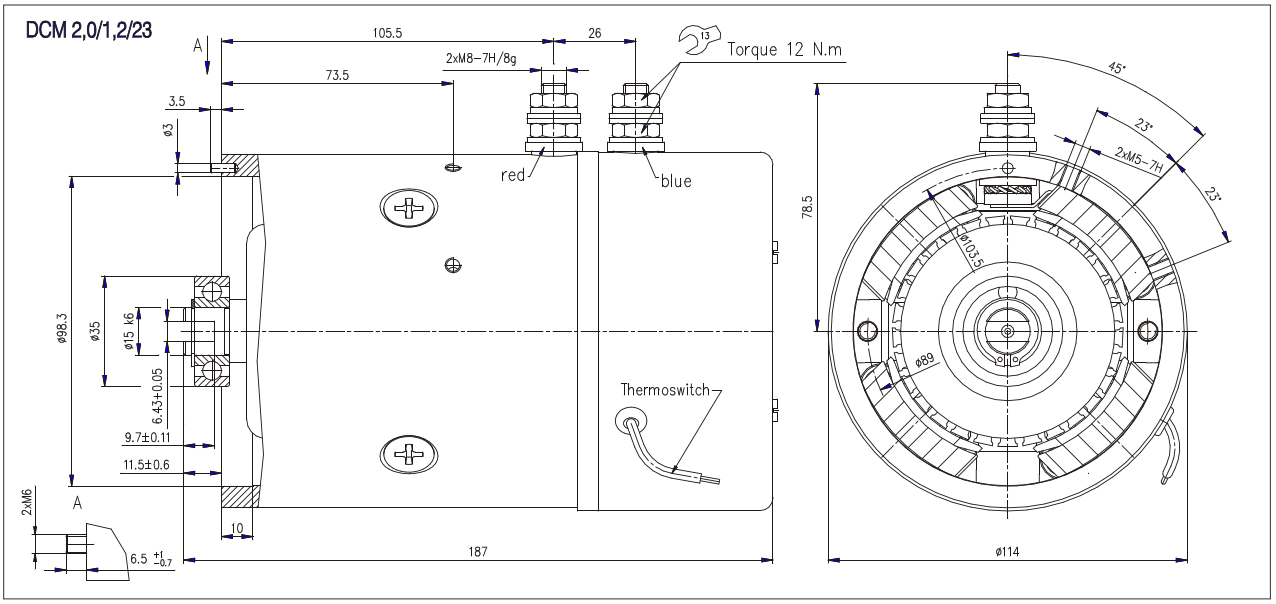

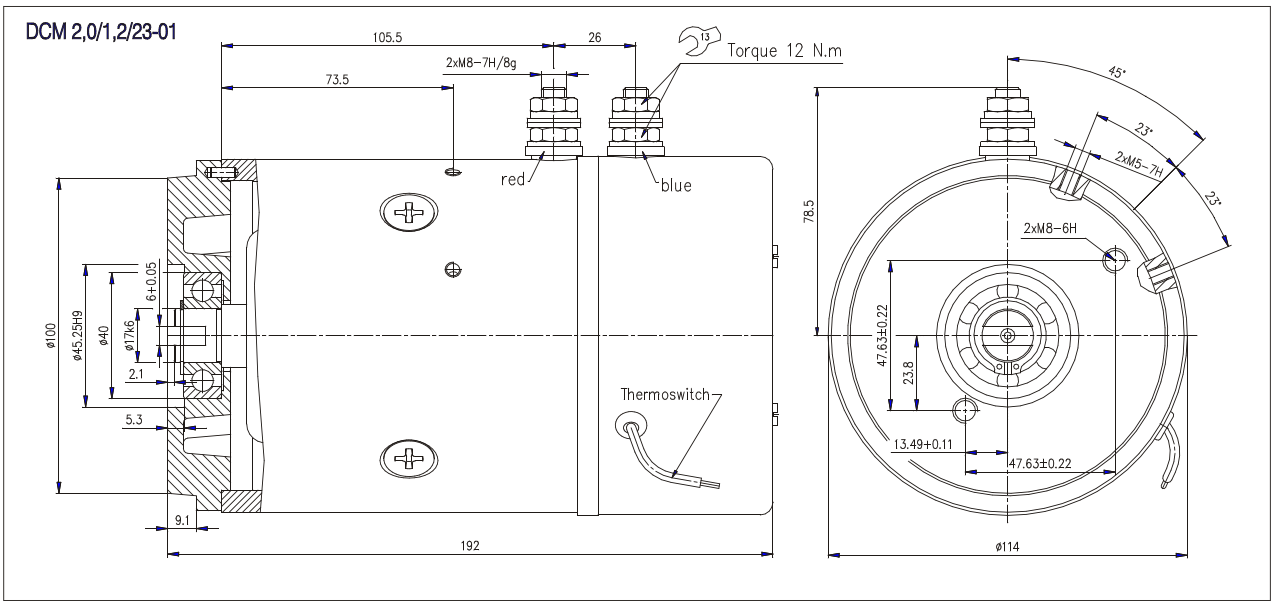

DCM 2,0/1,2/23
DCM 2,0/1,2/23-01

Rated Power	2 kW
Rated Voltage	12 V
Rated Current	270 A
Rated Speed	2300 min.$^{-1}$
Operation Mode	S2 - 1.5 min.
Excitation	Compaund
Protection	IP 44
Insulation	F
Weight	6.8 kg / 7.1 kg
Char. Curve	C12 B01
Rotation	C.W.D.E

Connection Diagram

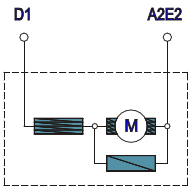

Design versions are adapted to standard assembly dimensions of hydraulic pumps and made according to special requirements of the customers

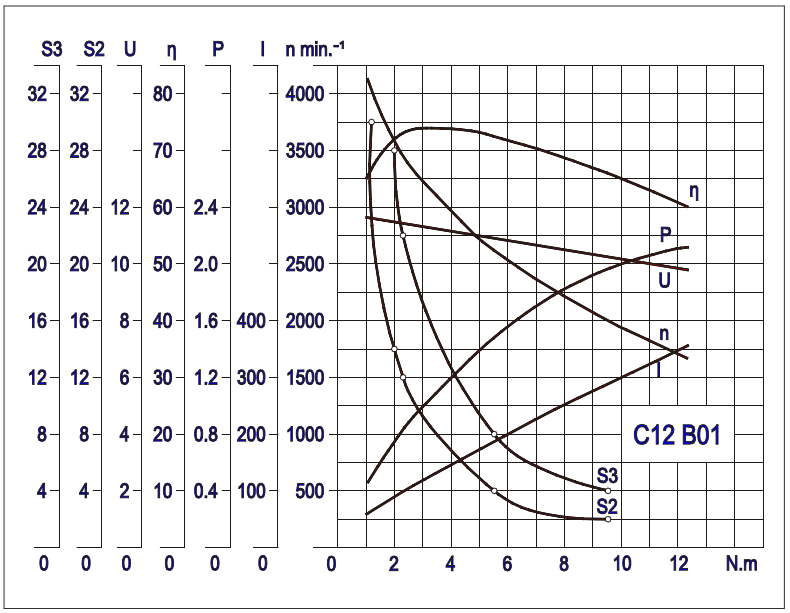

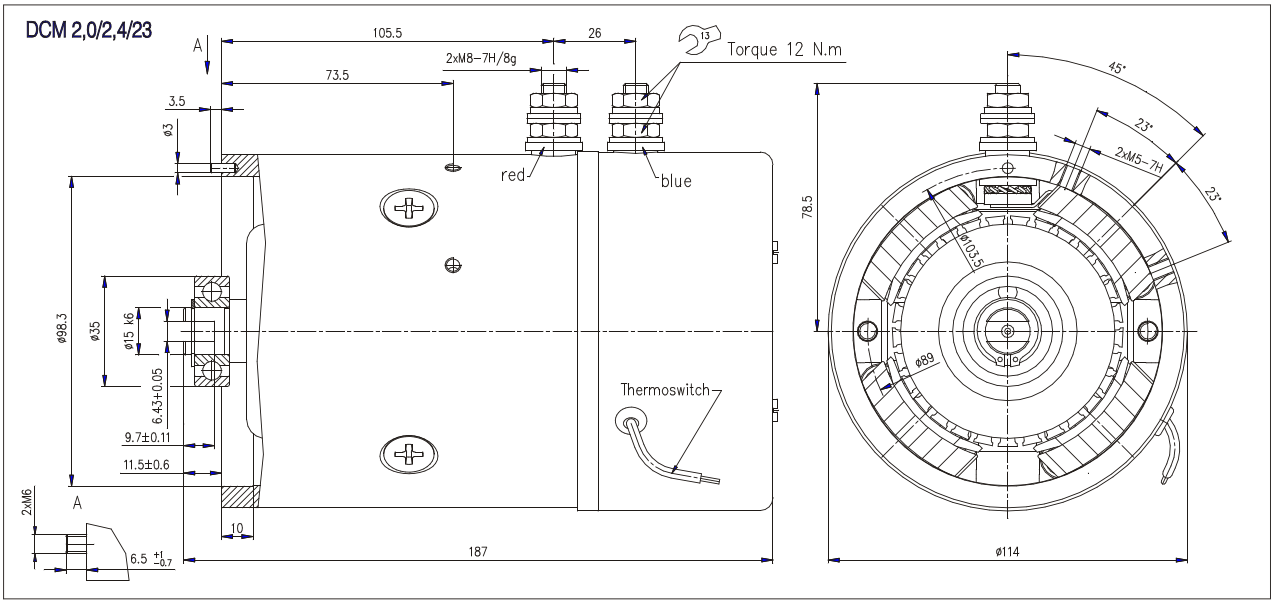

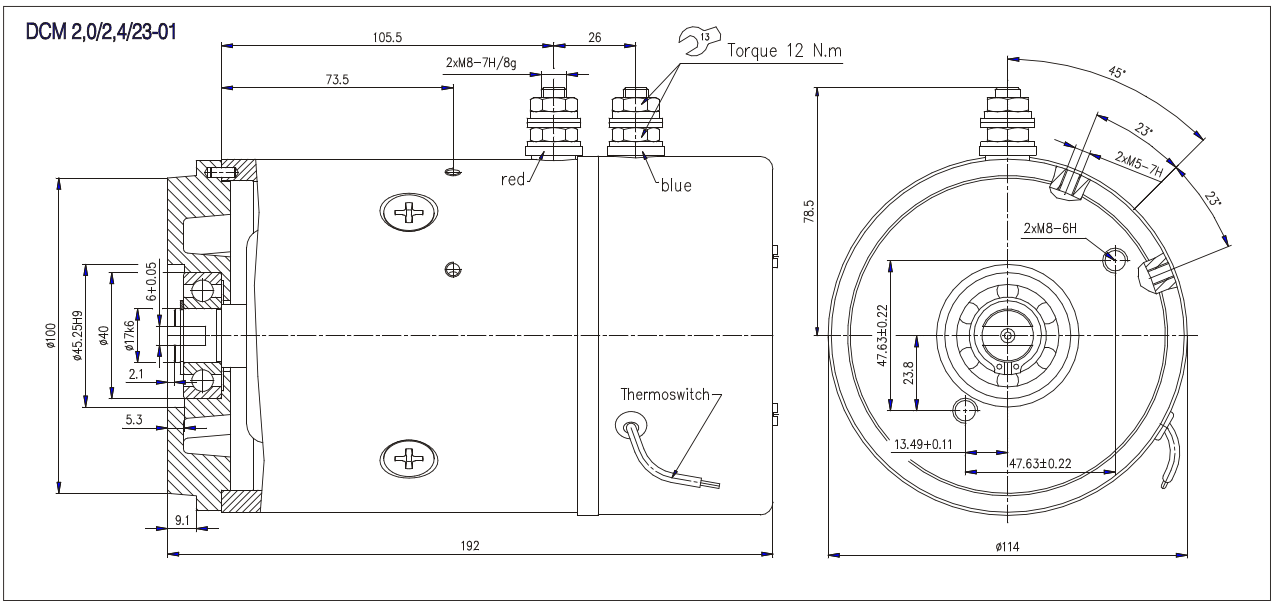

DCM 2,0/2,4/23
DCM 2,0/2,4/23-01

Rated Power	2 kW
Rated Voltage	24 V
Rated Current	121 A
Rated Speed	2300 min.$^{-1}$
Operation Mode	S2 - 2 min.
Excitation	Compaund
Protection	IP 44
Insulation	F
Weight	6.8 kg / 7.1 kg
Char. Curve	C24 B01
Rotation	C.W.D.E

Connection Diagram

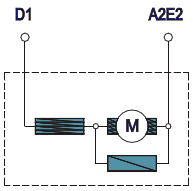

Design versions are adapted to standard assembly dimensions of hydraulic pumps and made according to special requirements of the customers

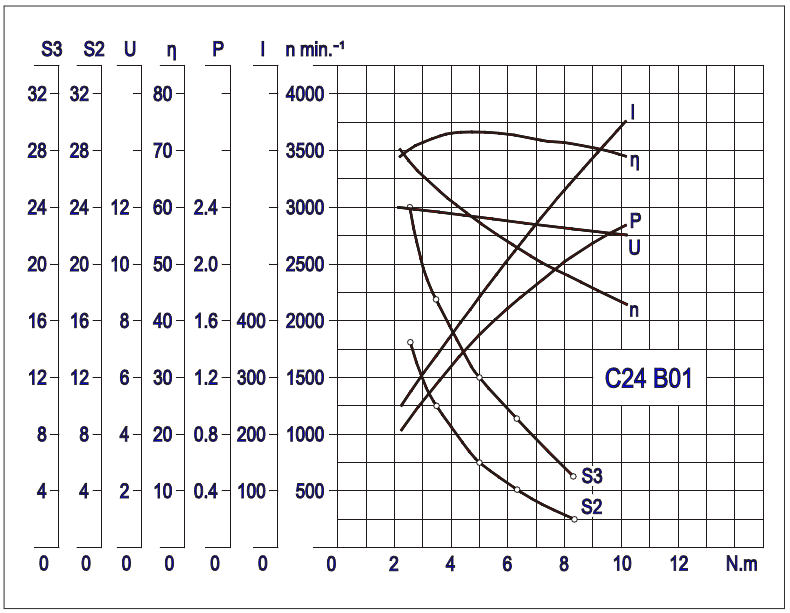

DCM 2,0/2,4/23-01GT

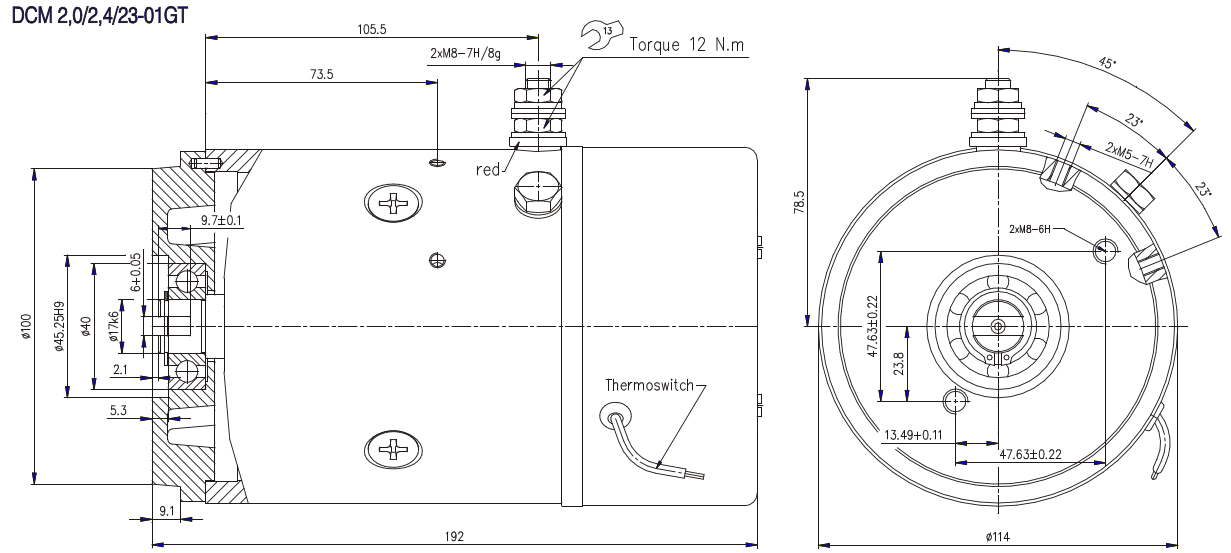

DCM 2,0/2,4/23-02OS

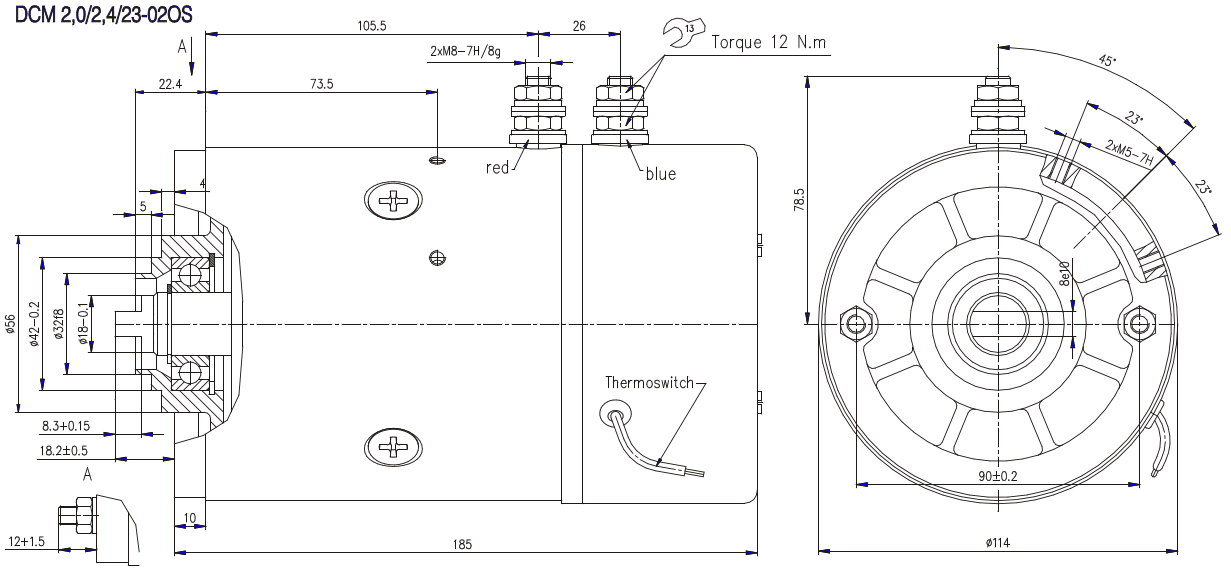

DCM 2,0/2,4/23-01GT
DCM 2,0/2,4/23-02OS

Rated Power	2 kW
Rated Voltage	24 V
Rated Current	121 A
Rated Speed	2300 min.$^{-1}$
Operation Mode	S2 - 1.5 min.
Excitation	Compaund
Protection	IP 44
Insulation	F
Weight	7.1 kg
Char. Curve	C12 B01
Rotation	C.W.D.E

Connection Diagram

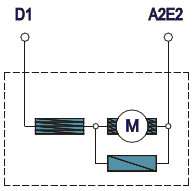

Design versions are adapted to standard assembly dimensions of hydraulic pumps and made according to special requirements of the customers

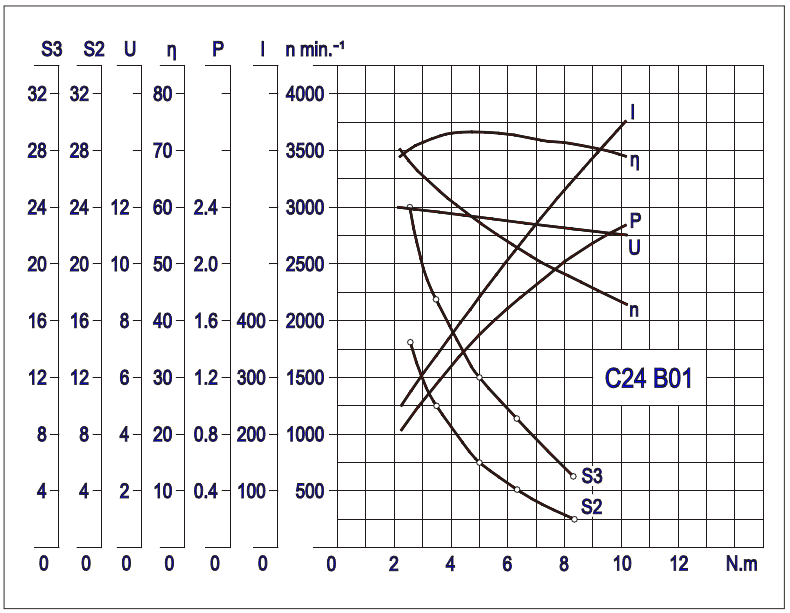

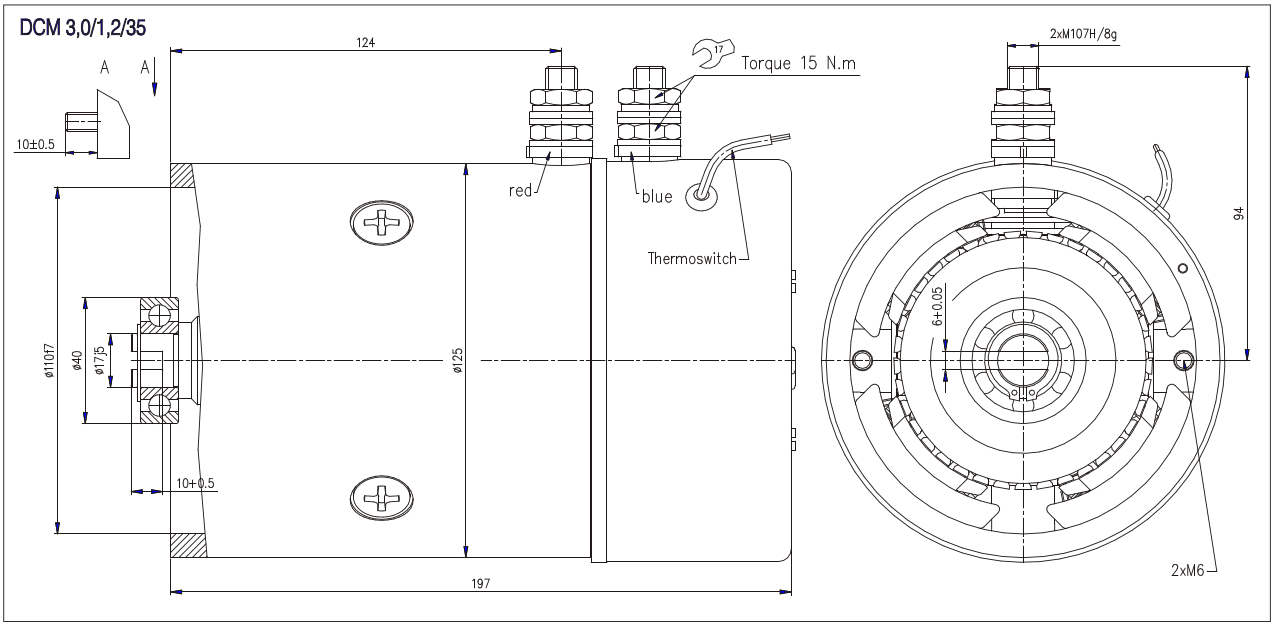

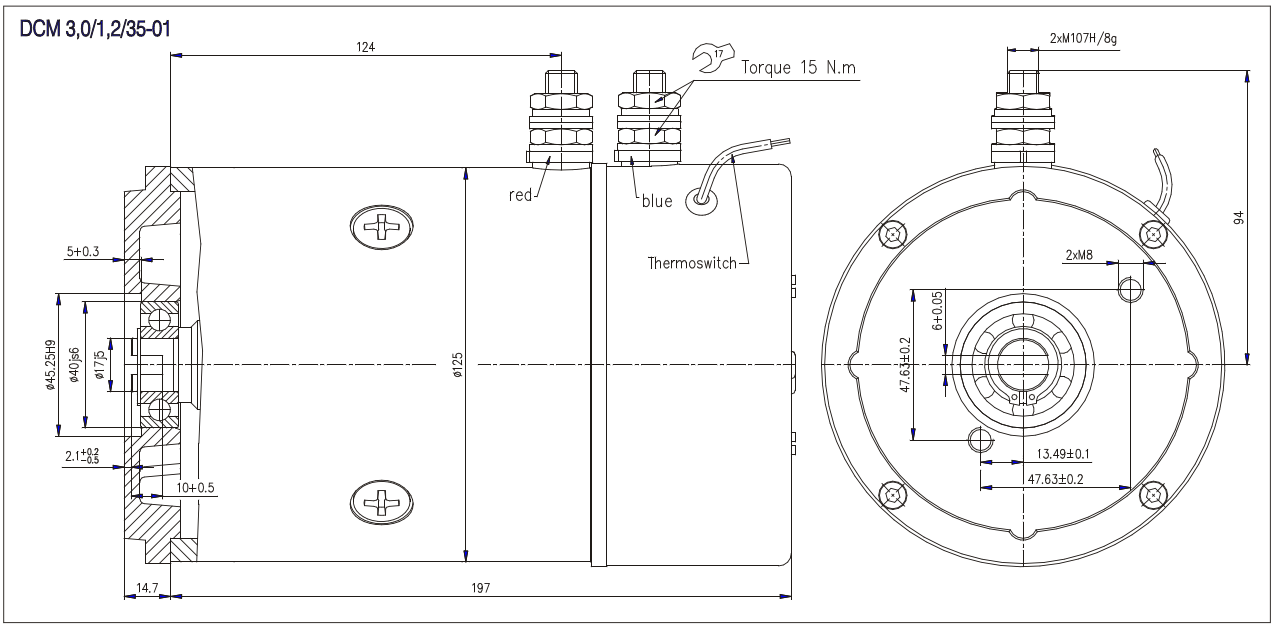

DCM 3,0/1,2/35
DCM 3,0/1,2/35-01

Rated Power	3 kW
Rated Voltage	12 V
Rated Current	360 A
Rated Speed	3500 min.$^{-1}$
Operation Mode	S2 - 3.5 min.
Excitation	Compaund
Protection	IP 44
Insulation	F
Weight	10.3 kg
Char. Curve	C12 C01
Rotation	C.W.D.E

Connection Diagram

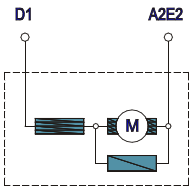

Design versions are adapted to standard assembly dimensions of hydraulic pumps and made according to special requirements of the customers

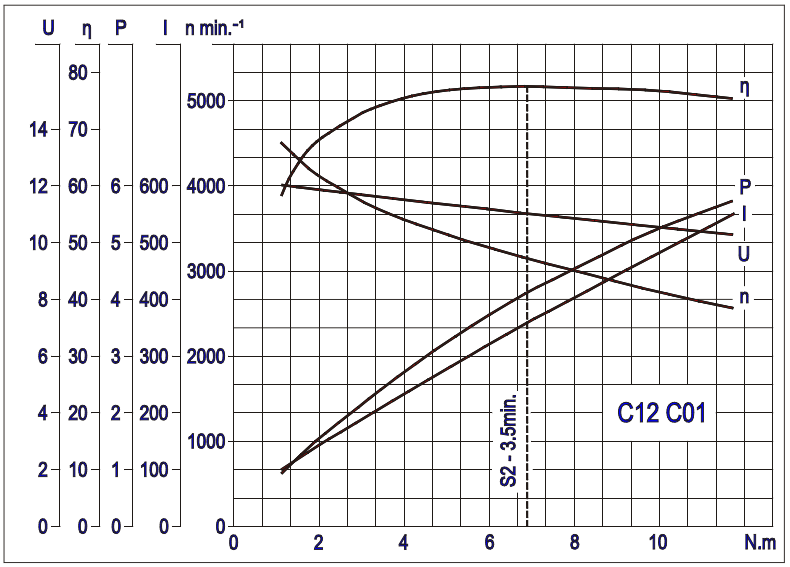

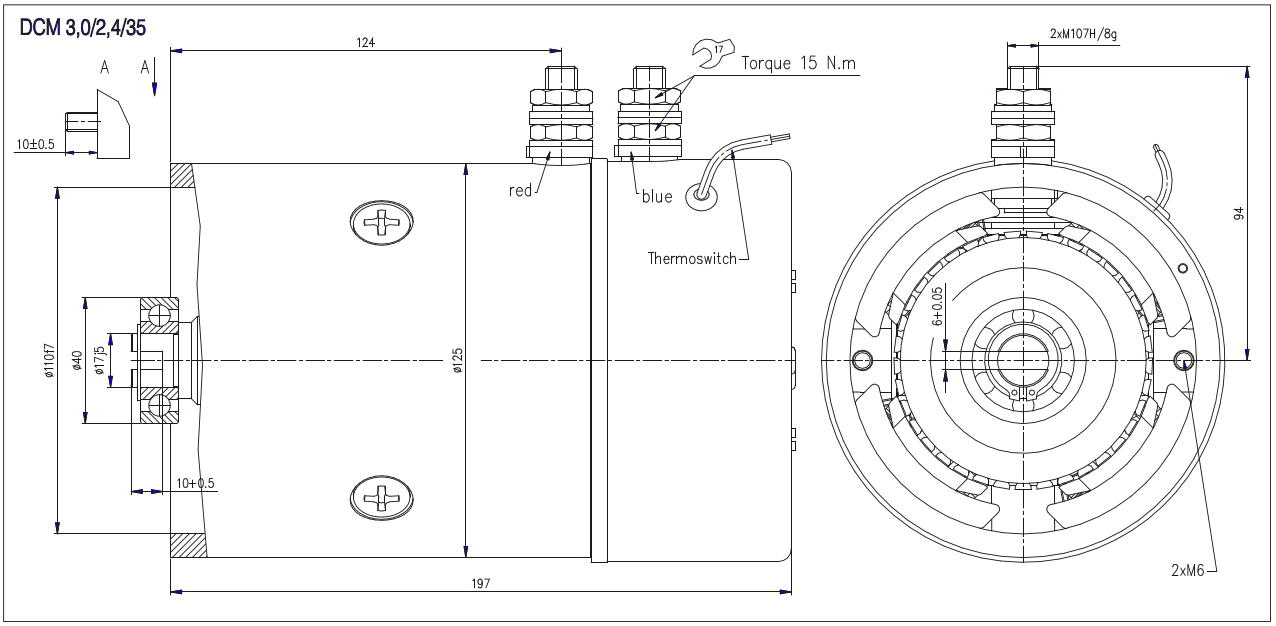

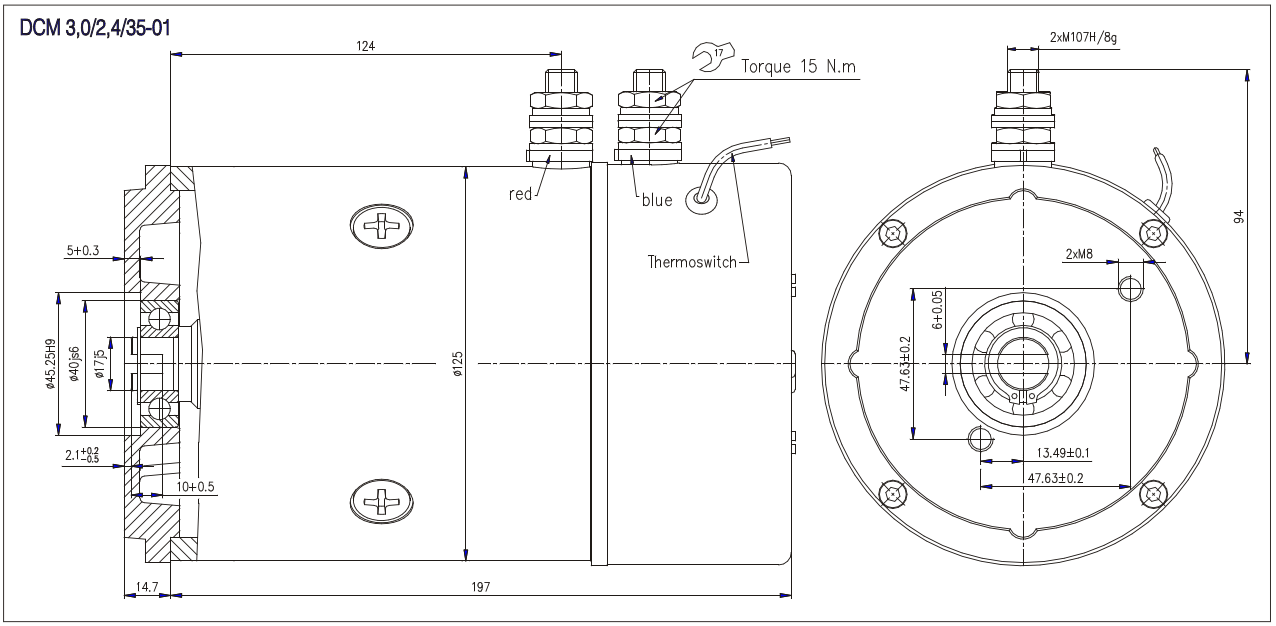

DCM 3,0/2,4/35
DCM 3,0/2,4/35-01

Rated Power	3 kW
Rated Voltage	24 V
Rated Current	168 A
Rated Speed	3500 min.$^{-1}$
Operation Mode	S2 - 4.5 min.
Excitation	Compaund
Protection	IP 44
Insulation	F
Weight	9.5 kg
Char. Curve	C24 C01
Rotation	C.W.D.E

Connection Diagram

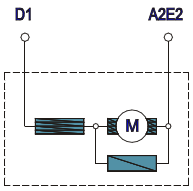

Design versions are adapted to standard assembly dimensions of hydraulic pumps and made according to special requirements of the customers

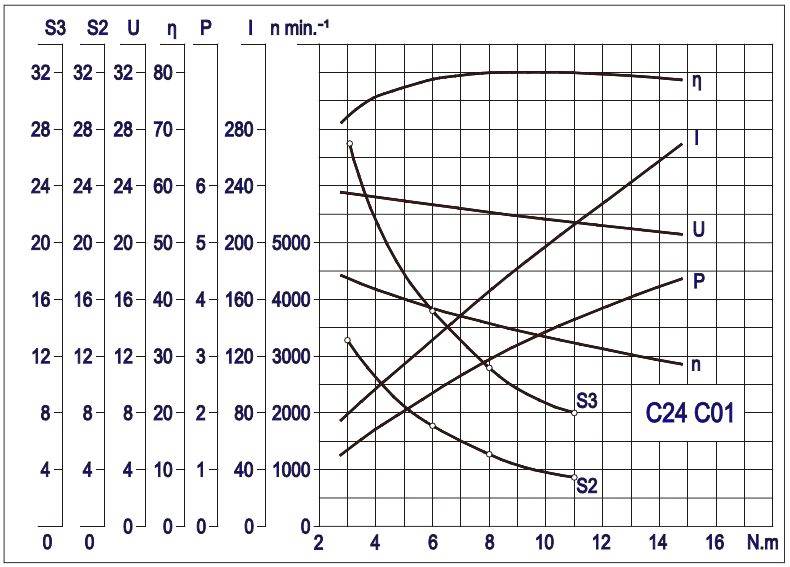

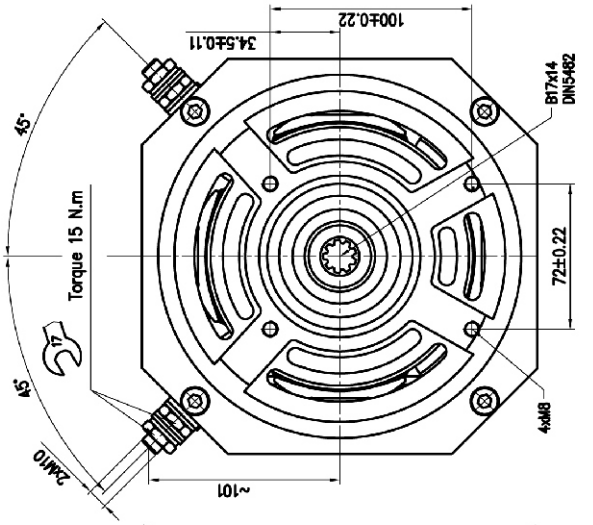

TECHNICAL DATA

	DCM 5,2/4,5/28	DCM 5,2/2,2/28
Rated Power	5.2 kW	5.2 kW
Rated Voltage	48 V	24 V
Rated Current	145 A	293 A
Rated Speed	2800 min.$^{-1}$	2800 min.$^{-1}$
Operation Mode	S2 - 15 min. S3 - 30%	S2 - 15 min. S3 - 30%
Excitation	Compaund	Compaund
Protection	IP 21	IP 21
Insulation	F	F
Weight	28.5 kg	29.5 kg
Rotation	C.W.D.E	C.W.D.E

DCM 5,2/4,5/28
DCM 5,2/2,2/28

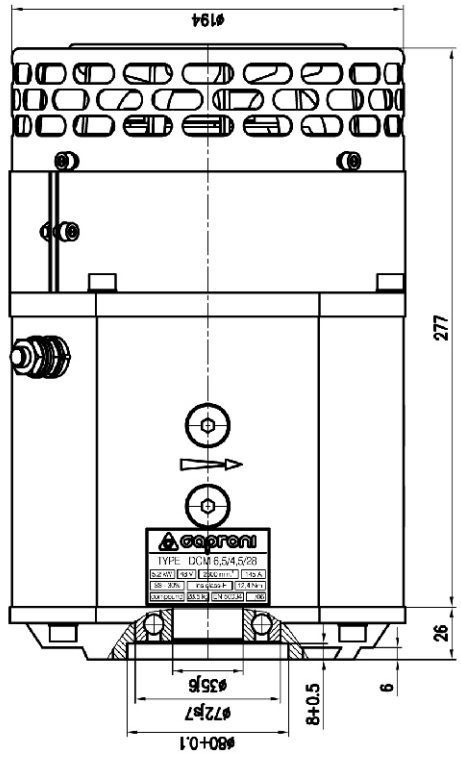

Design versions are adapted to standard assembly dimensions of hydraulic pumps and made according to special requirements of the customers

Connection Diagram

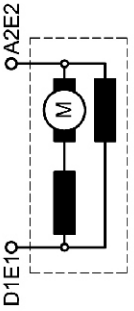

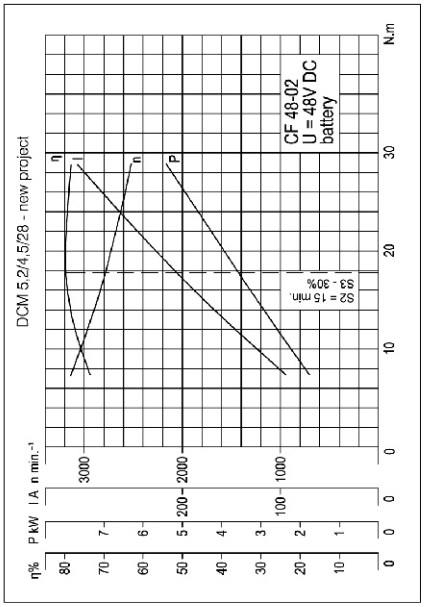

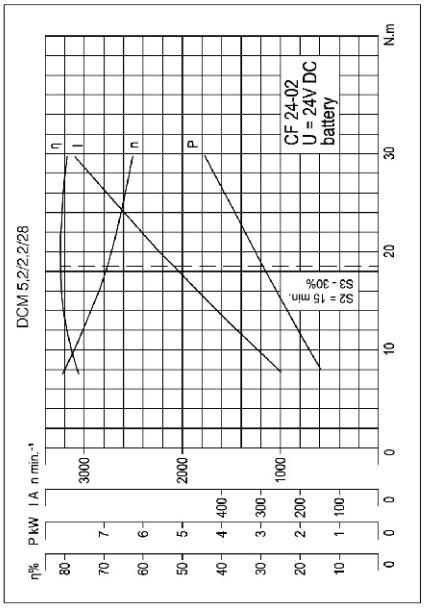

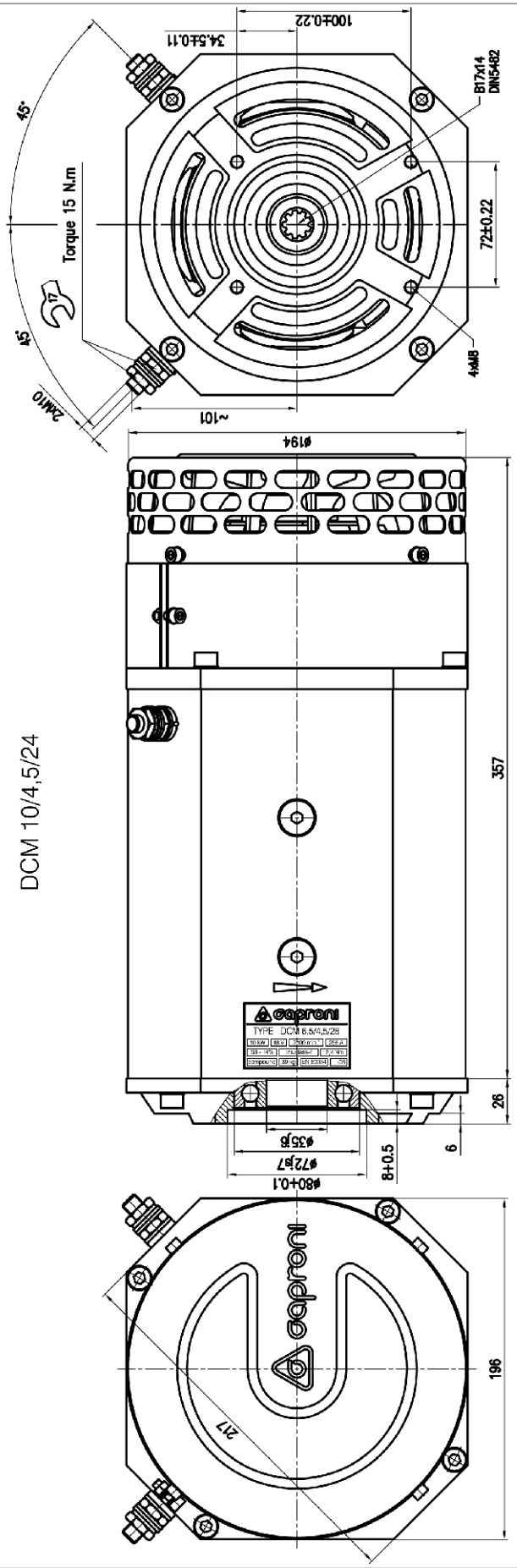

Design versions are adapted to standard assembly dimensions of hydraulic pumps and made according to special requirements of the customers

Connection Diagram

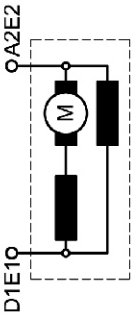

TECHNICAL DATA

Rated Power	10 kW
Rated Voltage	48 V
Rated Current	256 A
Rated Speed	2400 min^{-1}
Operation Mode	S2 - 10 min. S3 - 14%
Excitation	Compaund
Protection	IP 21
Insulation	F
Weight	39 kg
Rotation	C.W.D.E

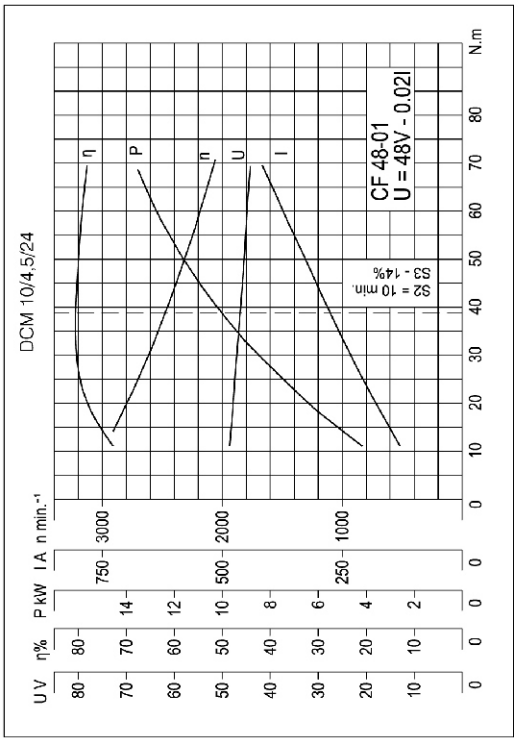

MOTOR - PUMP Type EC0.8/1.2/30-03/10A1.25X001

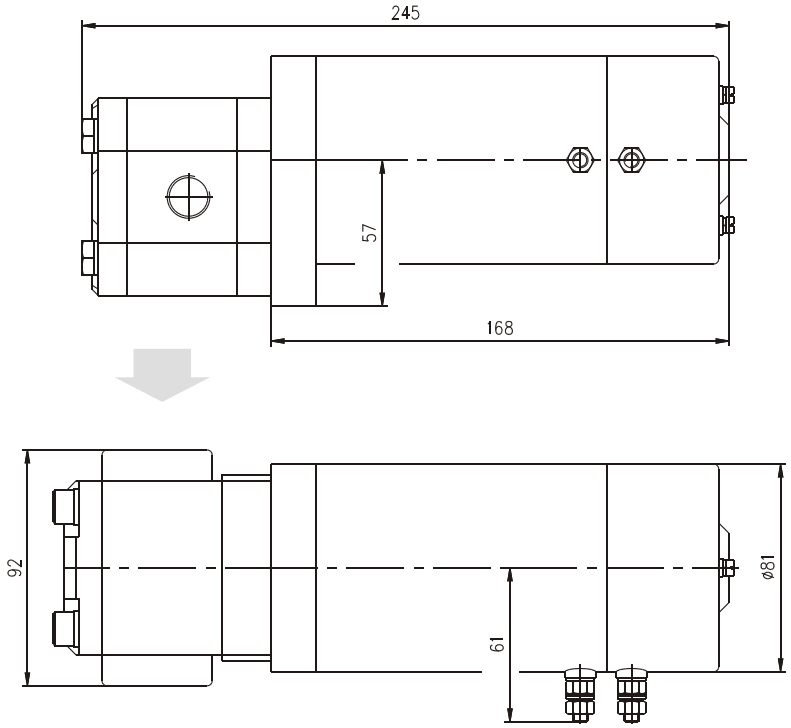

MOTOR	PUMP
Voltage 12 V DC	Type 10A1.25X001
Power 0.8 kW	Displacement 1.25 cc/rev.
n=3000 r.p.m.	Inlet - 1/4
S2 - 1.5 min.	Outlet - 1/4

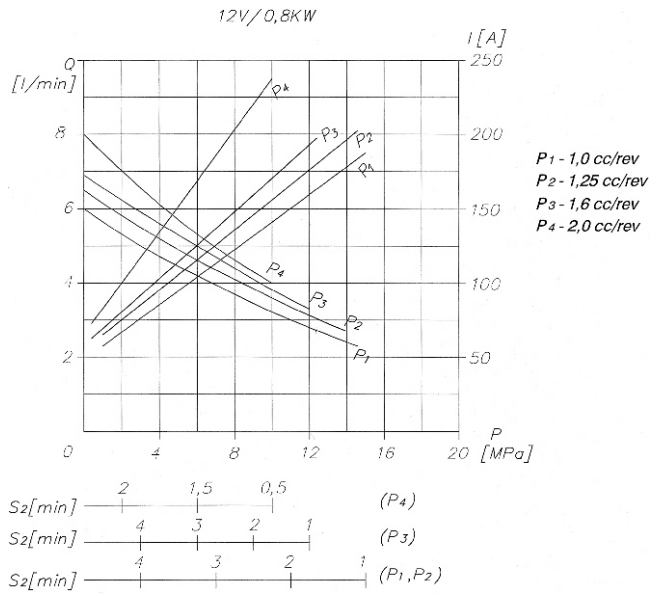

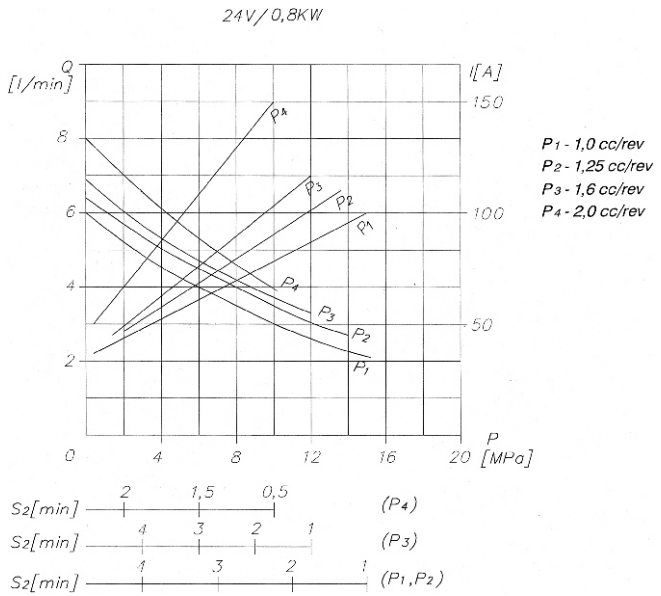

MOTOR - PUMP Type EC1.5/12/27-33/10A2X001

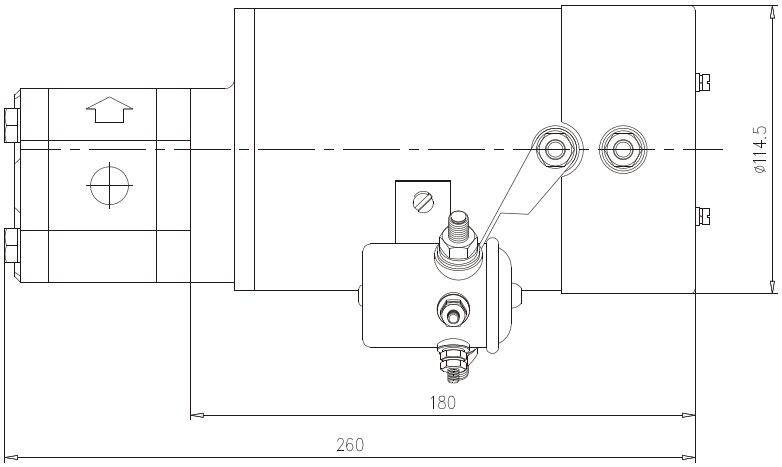

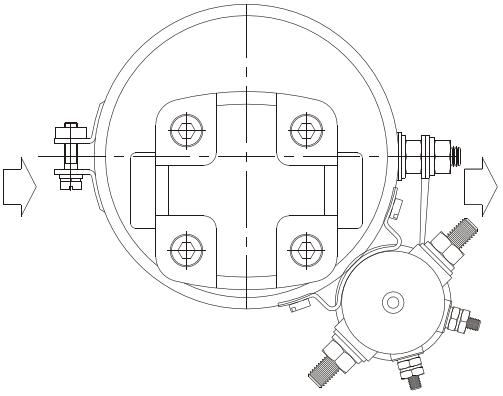

MOTOR	PUMP
Voltage 12 V DC	Type 10A2X001
Power 1.5 kW	Displacement 2 cc/rev.
n=2700 r.p.m.	Inlet - 1/2 NPTF-14
S2 - 4 min.	Outlet - 1/2 NPTF-14

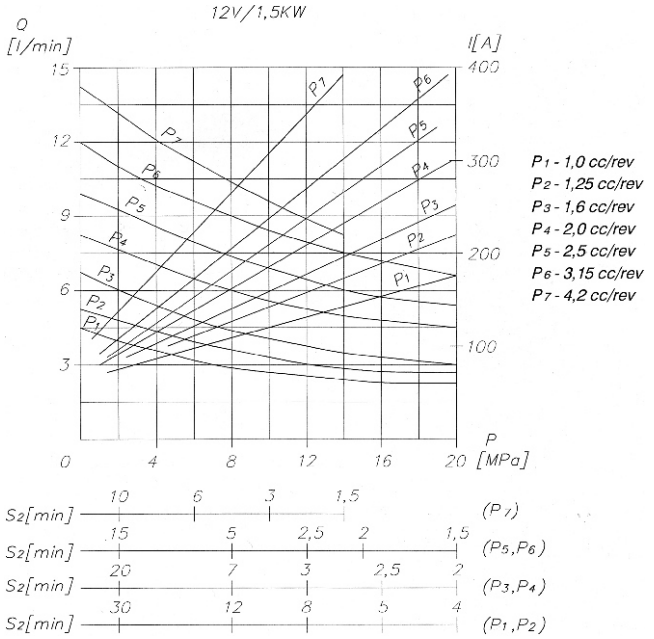

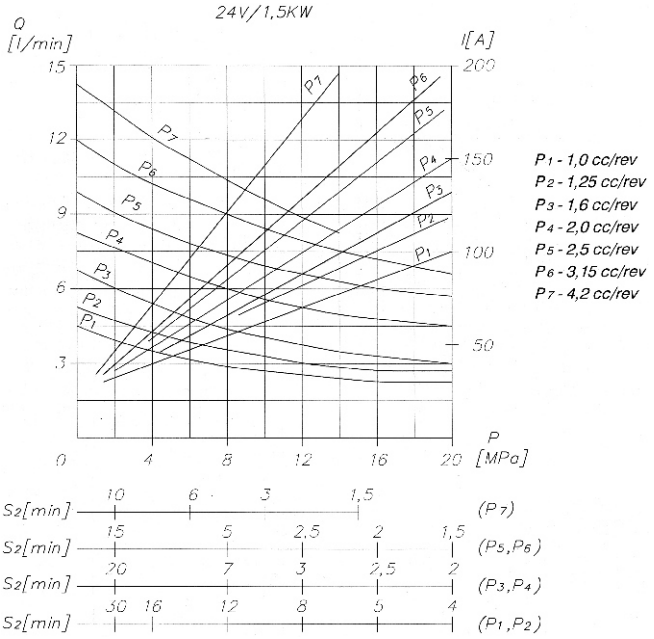

MOTOR - PUMP DCM 3/2.4/35/10A3.15X551

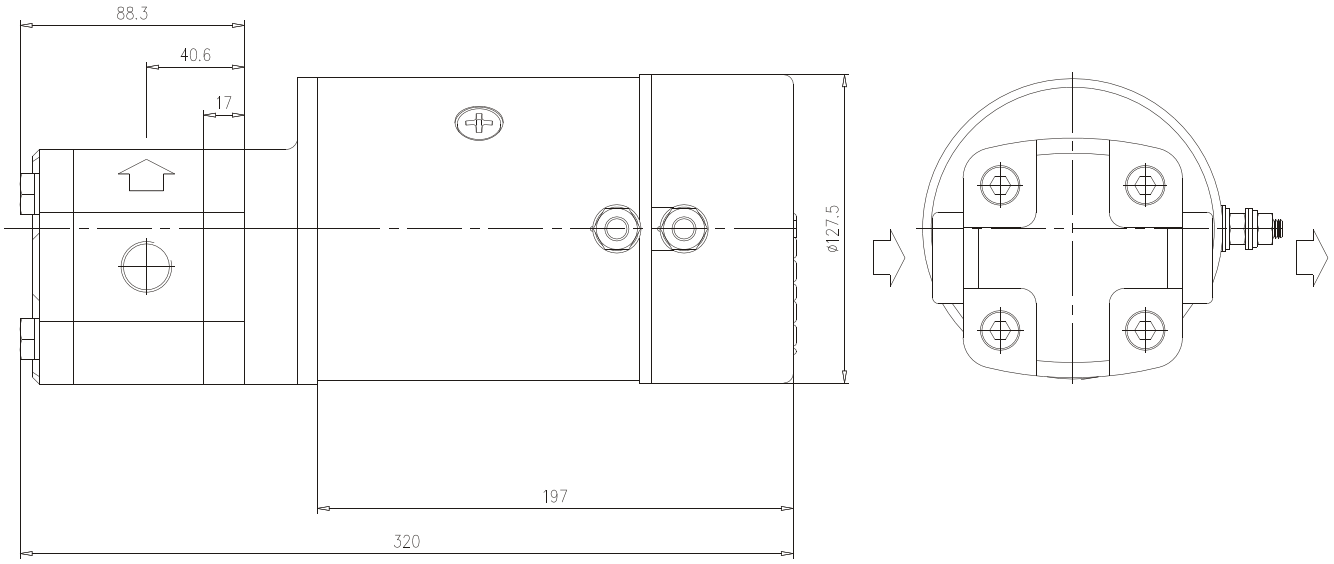

MOTOR	PUMP
Voltage 24 V DC	Type 10A3.15X551
Power 3 kW	Displacement 3.15 cc/rev.
n=3500 r.p.m.	Inlet 1/2 NPTF - 14
S 2 - 6 min.	Outet G1/2
IP 20	
Insulation F	

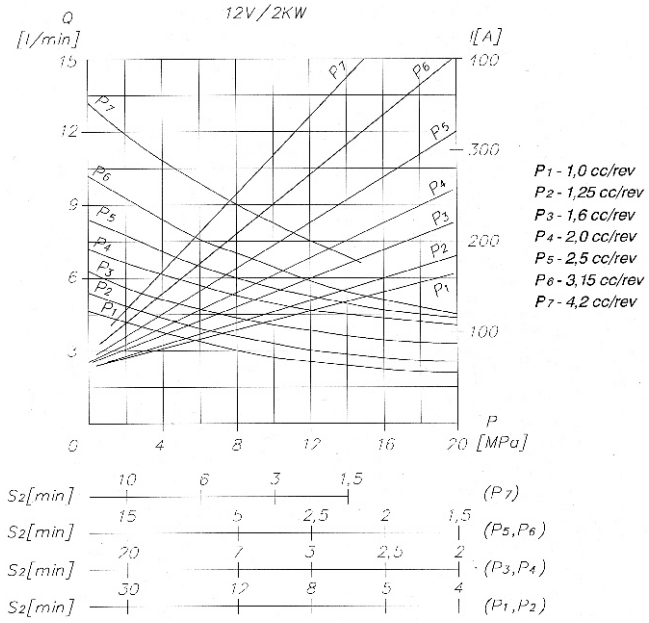

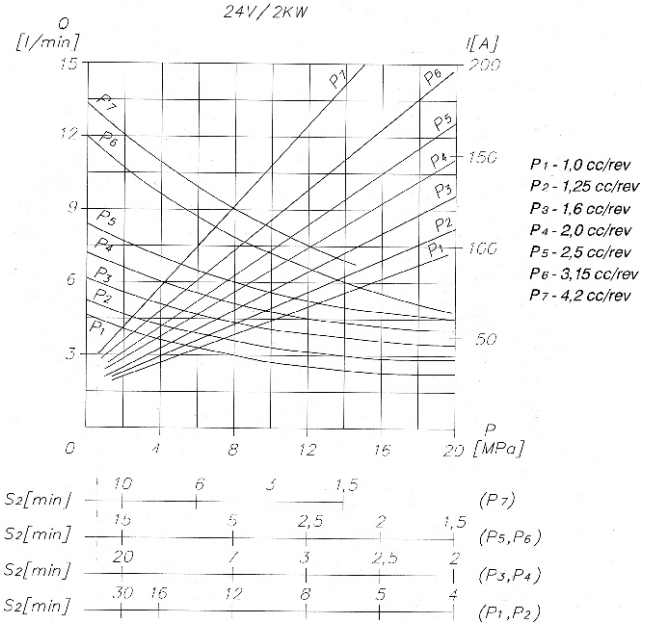

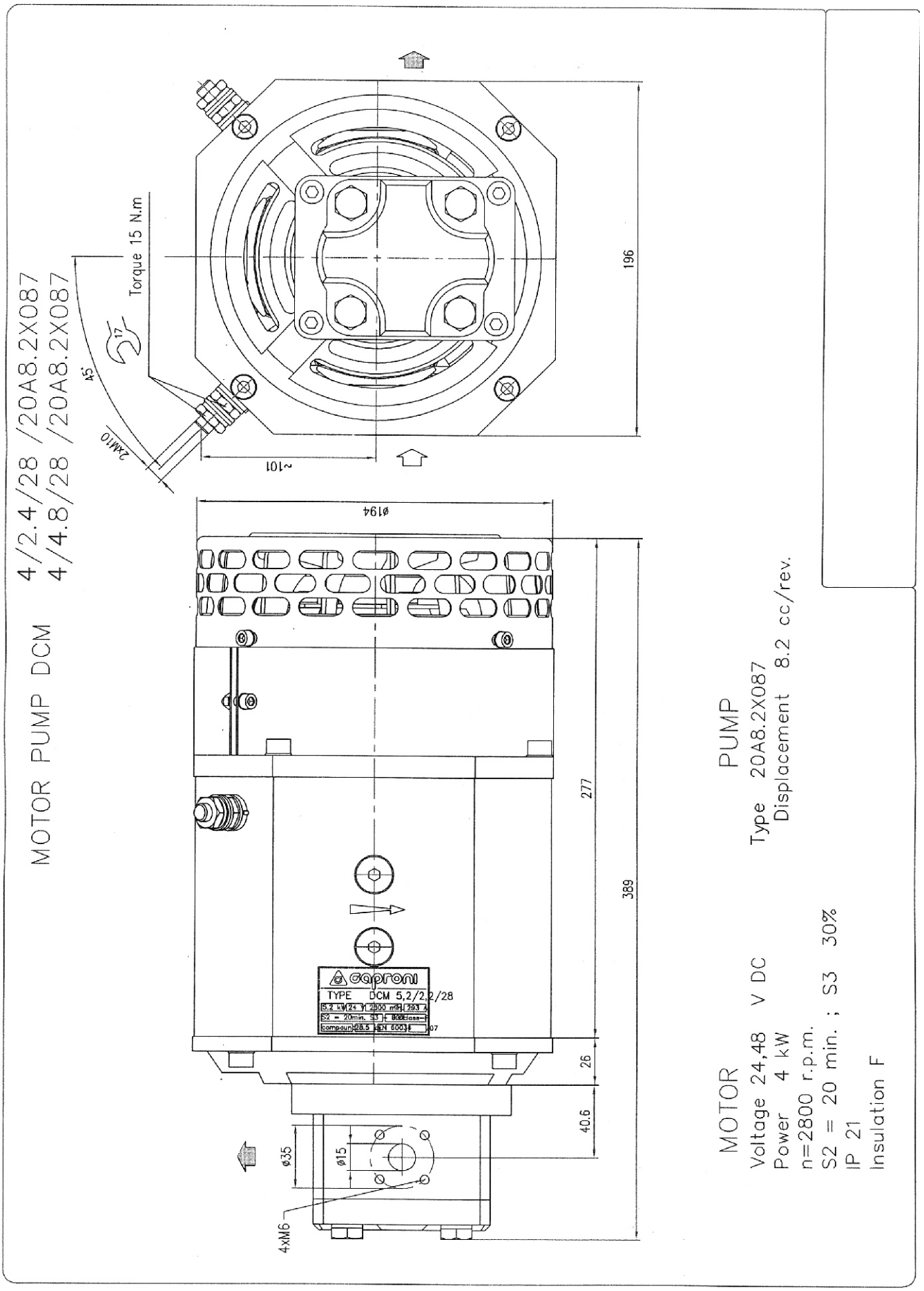
MOTOR PUMP DCM 4/2.4/28 /20A8.2X087
4/4.8/28 /20A8.2X087
Torque 15 N.m
45°
17
2xM10
~101
196
Ø194
277
389
26
40.6
Ø35
Ø15
4xM6
caproni
TYPE DCM 5,2/2,2/28
PUMP
Type 20A8.2X087
Displacement 8.2 cc/rev.
MOTOR
Voltage 24,48 V DC
Power 4 kW
n=2800 r.p.m.
S2 = 20 min. ; S3 30%
IP 21
Insulation F

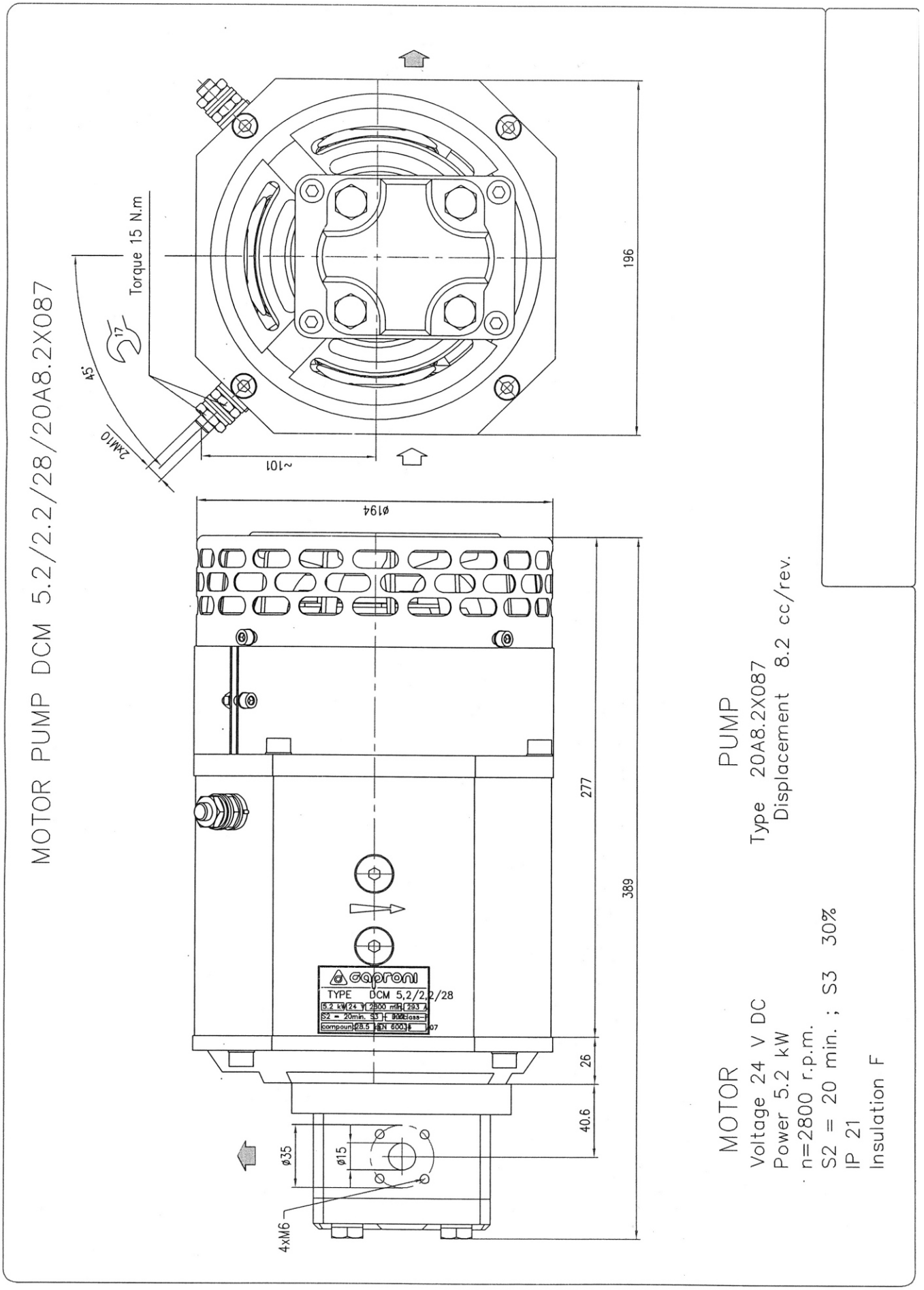
MOTOR PUMP DCM 5.2/2.2/28/20A8.2X087
Torque 15 N.m
45°
2xM10
~101
196
Ø194
277
389
26
40.6
Ø35
Ø15
4xM6
caproni
TYPE DCM 5,2/2,2/28
PUMP
Type 20A8.2X087
Displacement 8.2 cc/rev.
MOTOR
Voltage 24 V DC
Power 5.2 kW
n=2800 r.p.m.
S2 = 20 min. ; S3 30%
IP 21
Insulation F

Description.
For starting, controling and stoping the working fluid between the generator of pressured flow, the consumers and the Tank.

Specifications:

Max. operating pressure	P=250 bar T=50 bar A, B=300 bar
Nominal flow	35 l/min (See operating diagram)

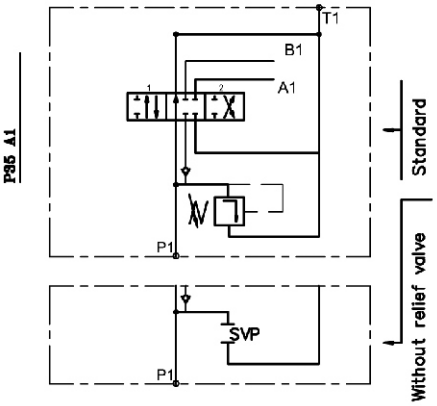

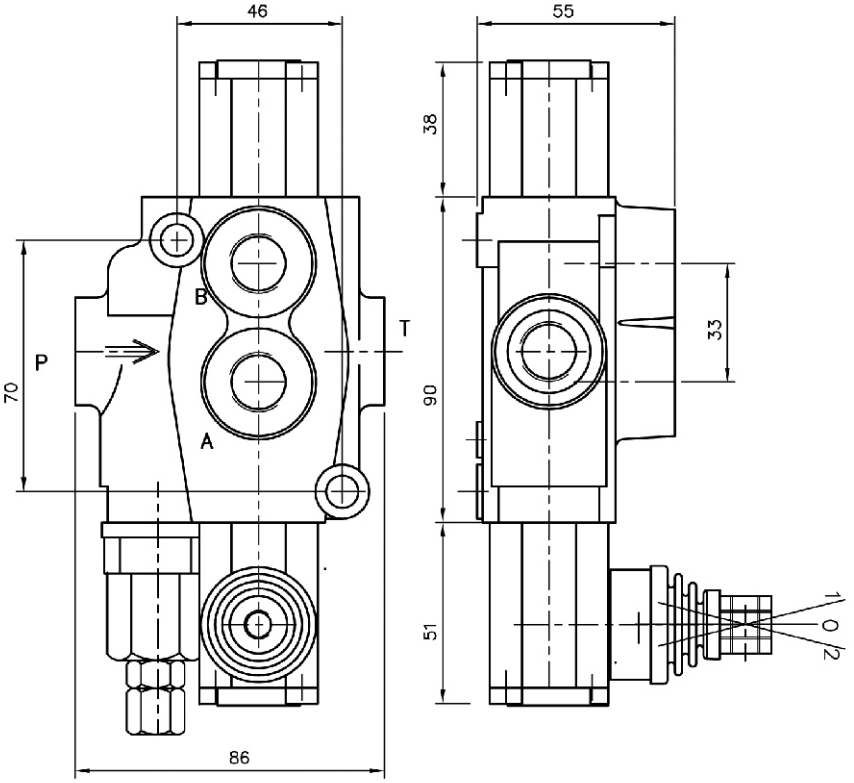

P35	R	A	1	G	KZ1	T	E
directional control valve type ...	inlet high pressure – right	first spool distribution type	spool control/detend and ets./	ports /treads/	general operation feature	with "Teton"	with electric switsh

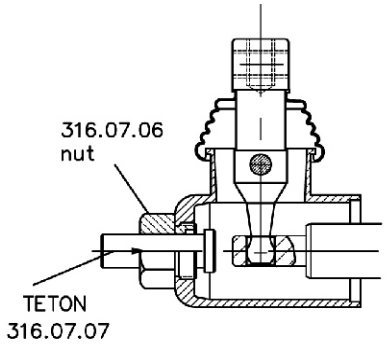

P40 directional control valve

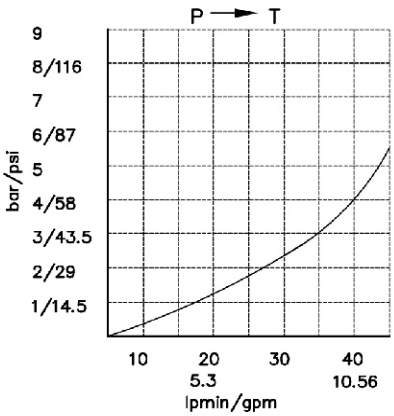

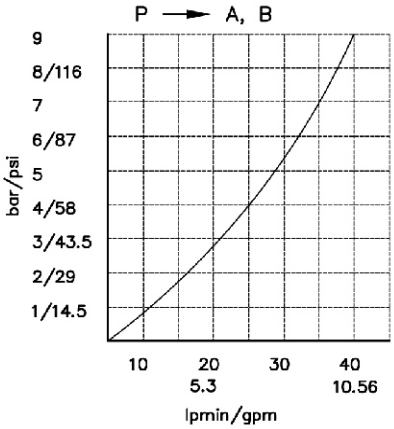

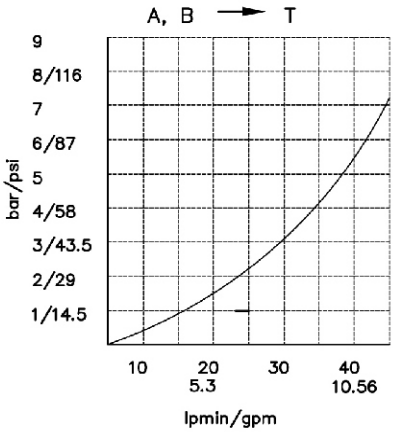

Table 5

code	spool type
A	
B	
C	
D	
E	
F	
M	
N	
O	
P	
Q	
R	

Table 6

code	spool control
1	
2	
3	
4	
5	
6	
7	
8	
9	
10	
11	

Table 7

code	incorporated microswitch	
E		mikroswitch type Omron–V 165 I C5

code	ports (treads)		
	P	A ; B	T
M	M18x1.5	M18x1.5	M18x1.5
G	G3/8	G3/8	G3/8
S	3/4–16UNF	3/4–16UNF	3/4–16UNF

kind of hand control ;

code	feature	code	feature	code	feature
KZ	M8	KY	ø9	KI	ø9
KZ1	155	KY1	170	KI1	170
KZ0		KY0		KI0	
KZ01		KY01		KI01	
	without hand control				

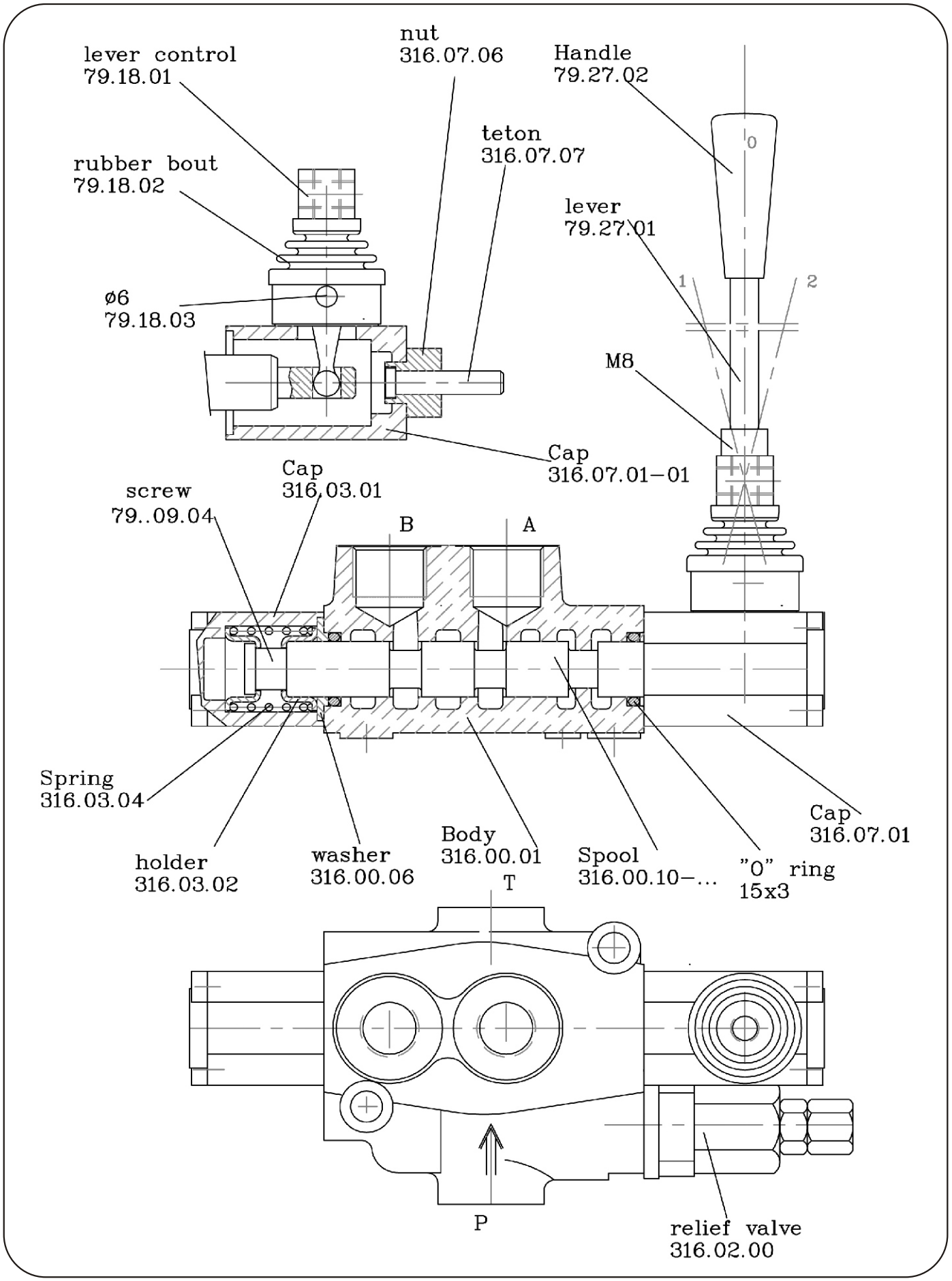
lever control
79.18.01
nut
316.07.06
Handle
79.27.02
teton
316.07.07
rubber bout
79.18.02
lever
79.27.01
0
1
2
ø6
79.18.03
M8
Cap
316.07.01-01
Cap
316.03.01
screw
79..09.04
B
A
Spring
316.03.04
holder
316.03.02
washer
316.00.06
Body
316.00.01
Spool
316.00.10-...
"O" ring
15x3
Cap
316.07.01
T
P
relief valve
316.02.00

Description

For starting, controlling and stopping the working fluid between the generator of pressured flow, the consumers and the Tank.

Specifications

1.Valve monoblock	
2.Mounting	2 bolts M8
3.Pressure connections	internal thread
4.Ambient temperature	-40C…+60C
5.Pressure medium	mineral oil based hydraulic oil
6.Viskosity	12…800 mm^2/s permissible range 20…100 mm^2/s recommended range
7.Fluid temperature	- 15C…+80C
8.Filtration	Oil contamination 10 to NAS1638
9. Max. operating pressure	P = 250 bar T = 50 bar A, B = 300 bar
10.Leakage	15 cm^3/min at 120 bar
11.Nominal flow	40 l/min (see “operating” diagram)
12.Spool stroke	± 6 mm
13.Actuating force	< 200 N in spool axis direction

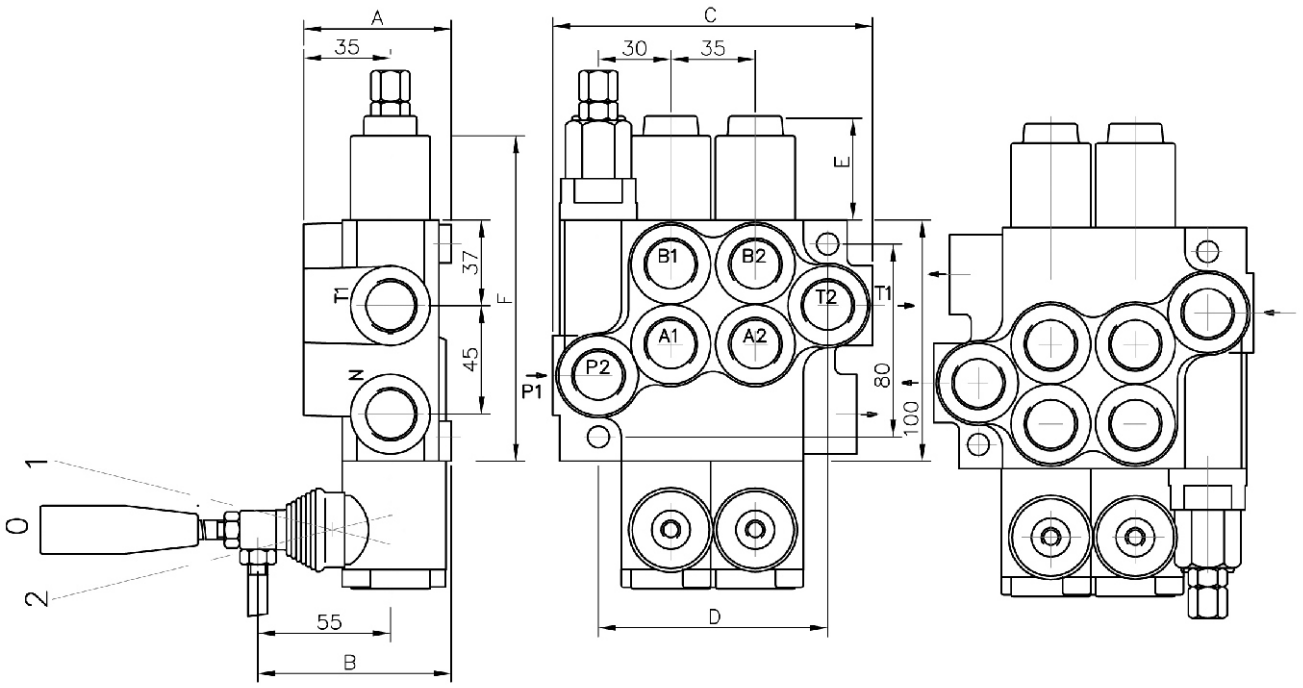

Table 1

	A	B	C	D	P1	P2	T1	T2
P40	60	80	85	60	+	–	+	–
02P40	60	80	129	97	+	+	+	+
03P40	60	80	164	132	+	+	+	+
04P40	60	80	199	167	+	+	+	+
05P40	60	80	234	202	+	+	+	+
06P40	60	80	269	237	+	+	+	+
07P40	60	80	304	272	+	+	+	+
2P40	60	80	129	97	+	+	+	+
3P40	60	80	164	132	+	+	+	+
4P40	60	80	199	167	+	+	+	+

Table 2

spool control	E	F
1; 4; 5; 6; 7; 8; 9; 10; 11;	40	193
2; 3;	72	225
16	+	+

0	2	P40	R	1	A	1	A	1	G	KZ1	T	H	E	C2	11
block with common check valve	number of spools	directional control valve type ...	inlet high pressure – right	way of distribution/parallel or .../	first spool distribution type	spool control/detend and ets./	second spool distribution type	spool control/detend and estr./	ports /treads/	general operation feature	with "teton"	operation feature /pneumatic, .../	with electric switsh	high pressure carry over	connection ports in use

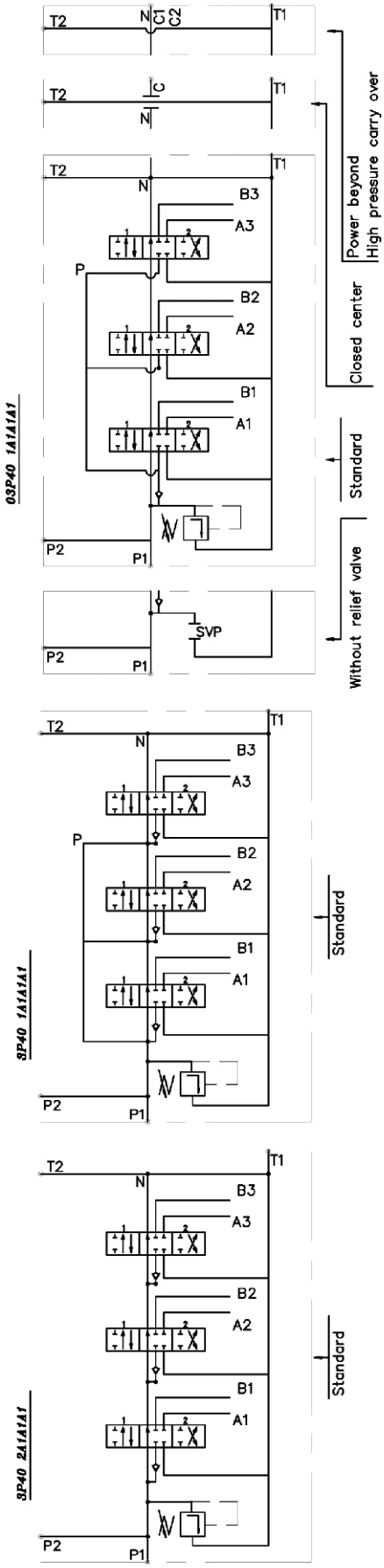

Table 3

code	Number of spools
	1
02, 2	2
03, 3	3

ets.

Table 4

code	way of distribution
1	parallel
2	tandem(series parallel)

Table 5

code	spool type
A	
B	
C	
D	
E	
F	
G	
H	
M	
N	
O	
P	
Q	
R	
S	
T	
* K	
** L	

Table 6

code	spool control
1	1 0 2
2	1 0 2
3	1 0 2
4	0 2
5	1 0
6	1 2
7	1 2
8	1 0 2
9	1 0
10	0 2
11	1 2
* 13	3 1 0 2
* 16	3 1 0 2
** 13R	1 0 2 3
** 12	1 0 2 3

Table 7

code	incorporated microswitch	
E		mikroswitch type Omron–V 165 I C5

Table 8

code	operation feature	
P		on–off pneumatic contol; 5–10 bar ; ports G1/4
H		on–off hydraulic control ; pn = 5 – 20 bar ; ports G1/4

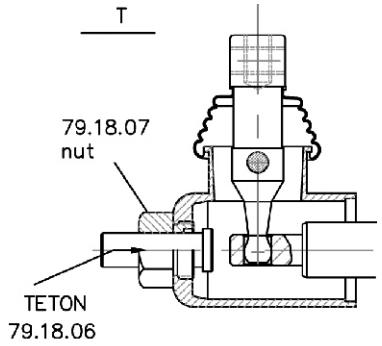

P40 directional control valve

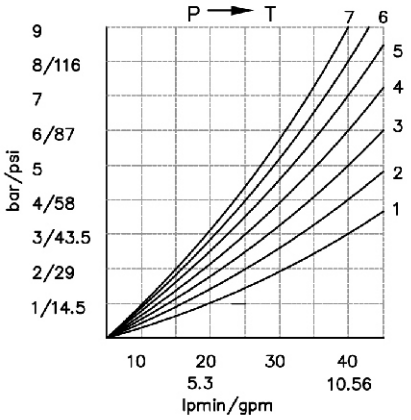

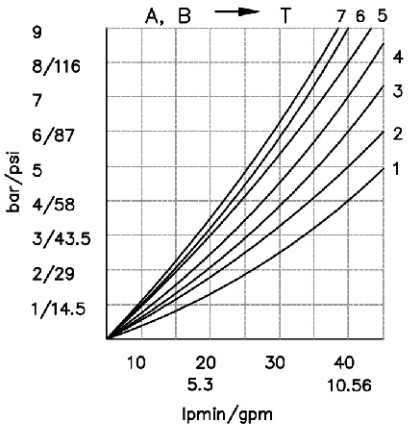

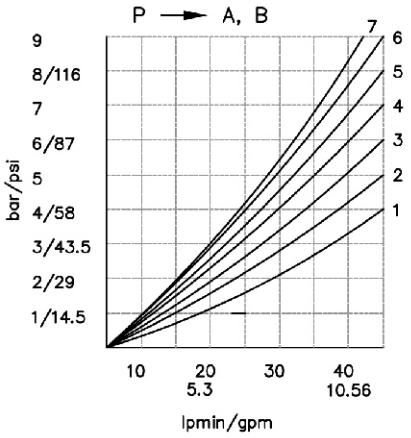

P40 — Table 9

code	ports (treads)			
	P	A ; B	T	N
M	M22x1.5	M18x1.5	M22x1.5	M22x1.5
G	G1/2	G3/8	G1/2	G1/2
S	7/8–14UNF	3/4–16UNF	7/8–14UNF	7/8–14UNF

kind of hand control — Table 10

code	feature	code	feature	code	feature
KZ	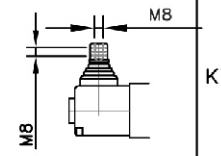	KY	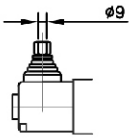	KI	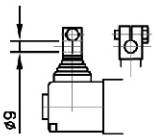
KZ1	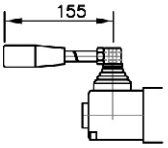	KY1	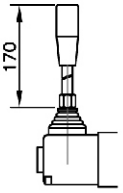	KI1	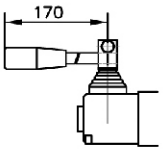
KZ0	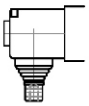	KY0	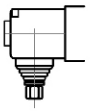	KI0	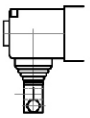
KZ01	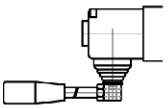	KY01	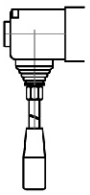	KI01	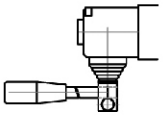
–	without hand control				

Table 11

code		
C	closed center	
C1	part for power beyond sleeve(carry over)	ø14 mm M22x1.5
C2	part for power beyond sleeve(carry over)	G 1/2 M22x1.5
–	without part for pressure carry over	
X	power beyond ever to tank	

Table 12

code	used connection ports
11	P1 ; T1
12	P1 ; T2
21	P2 ; T1
22	P2 ; T2

REMOTE CONTROLS

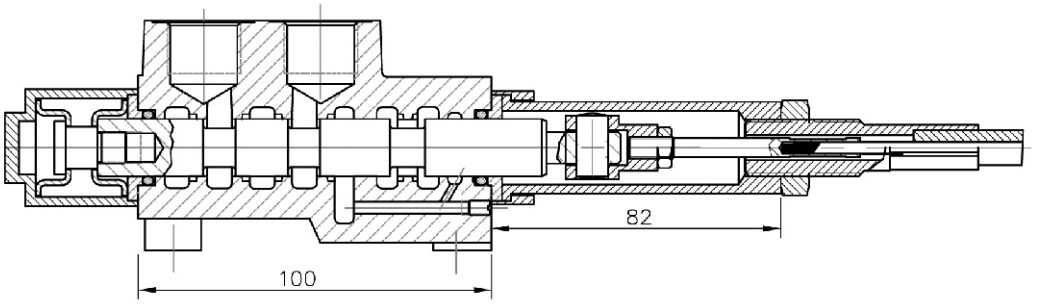

P40 A1G	V1(l= . . .)+	3047
spool valve	cable	control body

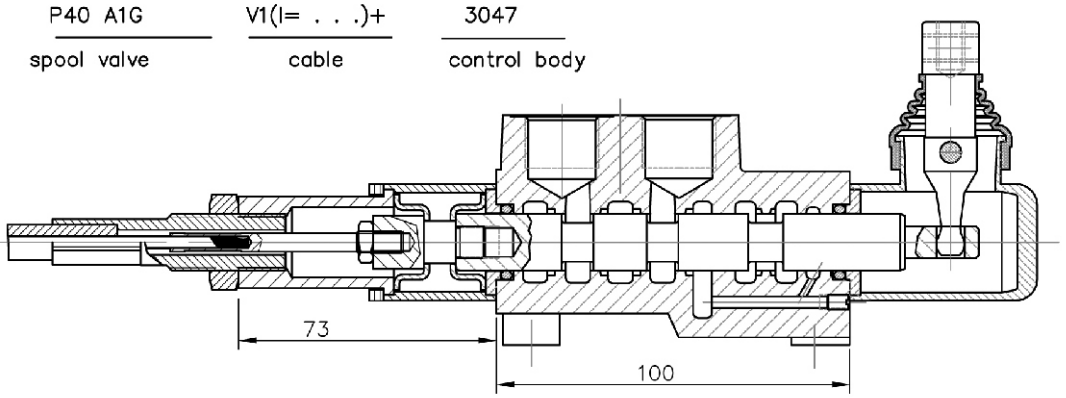

P40 A1G	V2KZ1(l= . . .)+	3047
spool valve	cable	control body

Cable "INDEMAR" Cod. IT 3056 /l=1.00; 1.50; 2.00; 2.50; 3.00 m/

+control body "INDEMAR"
code 3047, 3076, 3077

Technical specifications			
	3047	3076	3077
Stroke	13+13 mm	13+13 mm	13+13 mm
Max. load	45 kg	45 kg	45 kg
Level ratio	10:1	10:1	10:1
Lock in neutral	No	No	Yes
Antireverse lock	No	Yes	No
Body colour	Black	Black	Black
Cables type	Heavy Duty	Heavy Duty	Heavy Duty
Operating temperature	−40/+80C	−40/+80C	−40/+80C

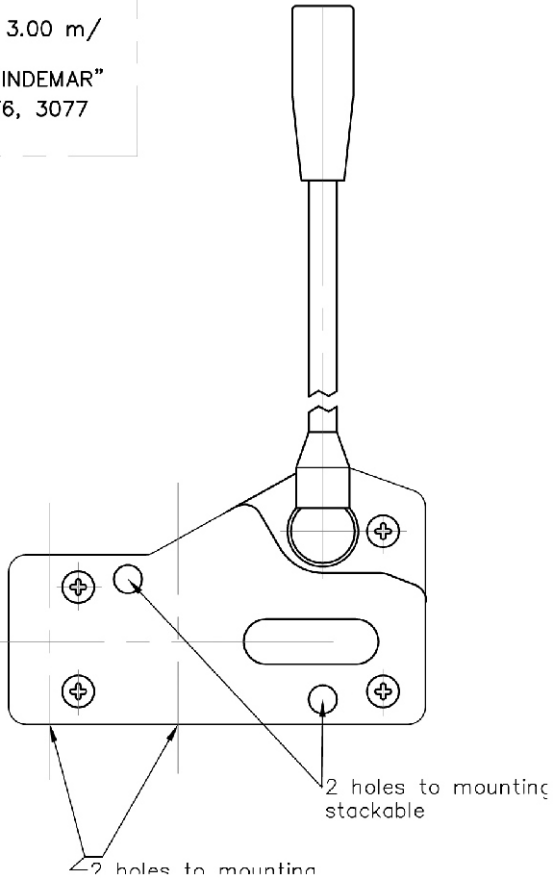

High solidity controls for easy mounting on every type of distributor.They can by mounted stand alone or packed together.
They use push−pull heavy duty cables that provide a positive smooth operating lever and are manifactured in a three differents models to meet different needs of Clients.

JOYSTICK "+"

This control gives the possibility to operate, at the same time two spools with a"+"movement.

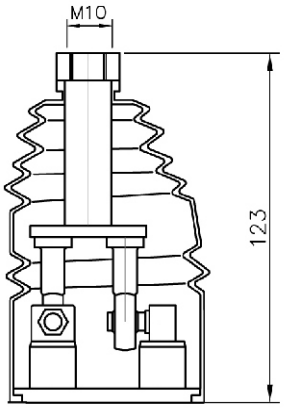

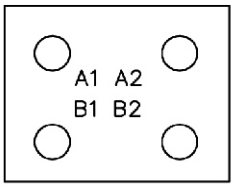

standard version 1

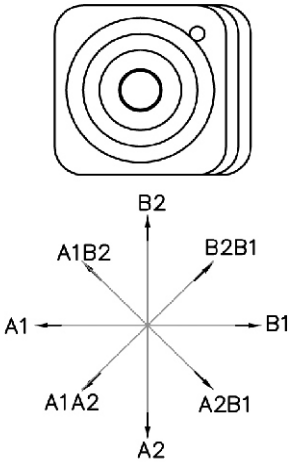

standard version 2

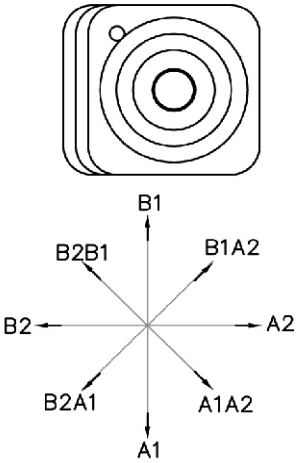

standard version 3

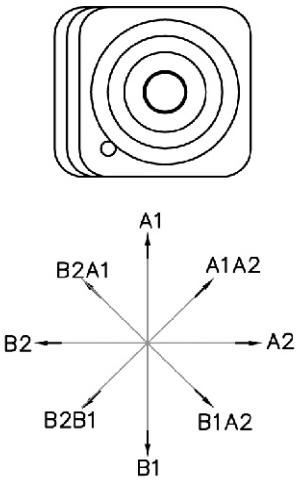

standard version 4

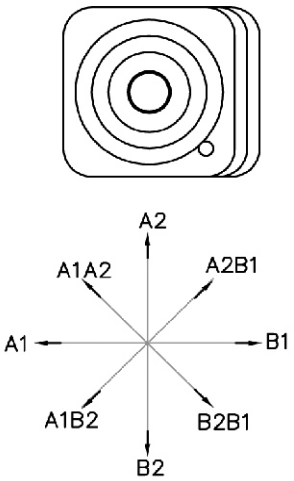

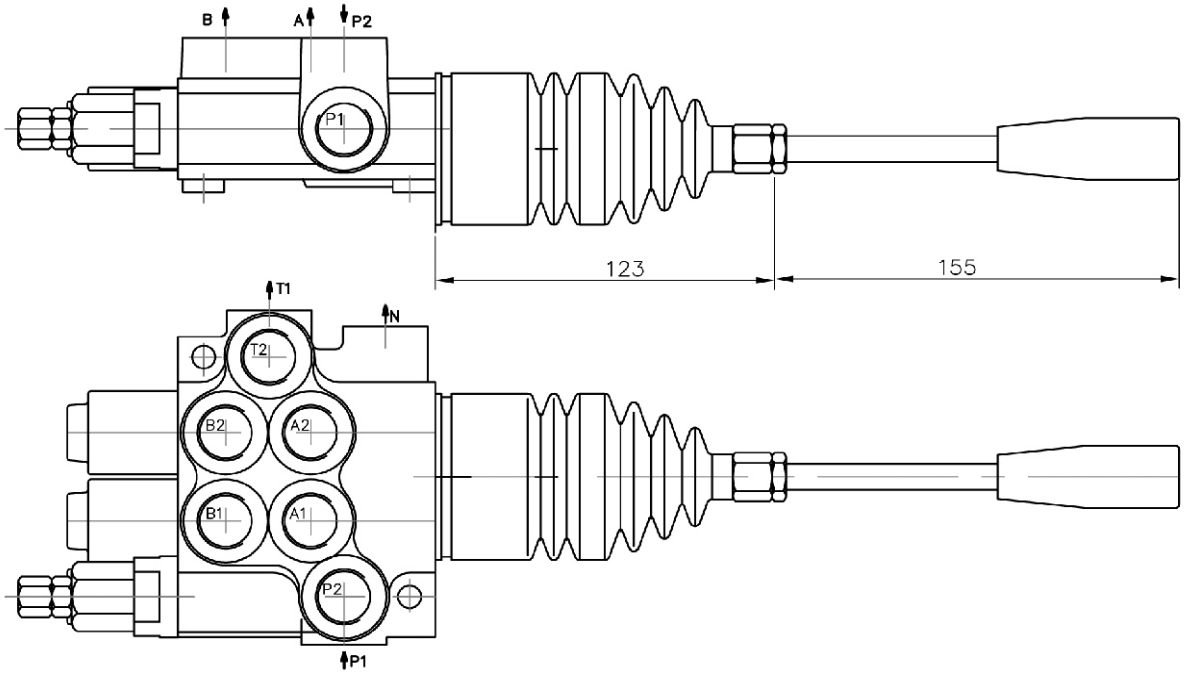

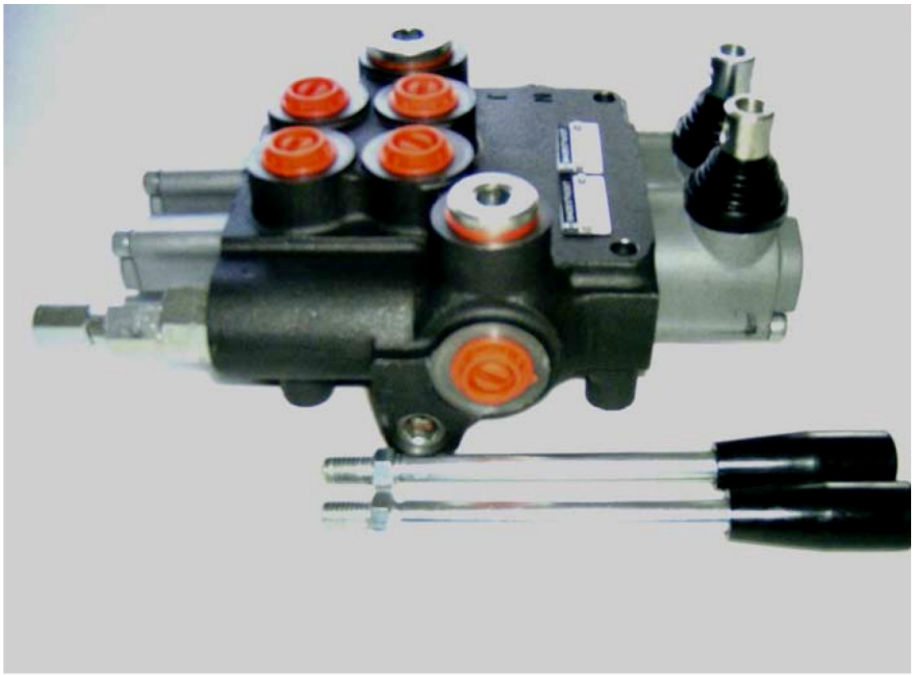

Description

For starting, controlling and stopping the working fluid between the generator of pressured flow, the consumers a the Tank.

Specifications

1.Valve monoblock	
2.Mounting	3 bolts M8
3.Pressure connections	internal thread
4.Ambient temperature	-40C…+60C
5.Pressure medium	mineral oil based hydraulic oil
6.Viskosity	12…800 mm²/s permissible range 20…100 mm²/s recommended range
7.Fluid temperature	- 15C…+80C
8.Filtration	Oil contamination 10 to NAS1638
9. Max. operating pressure	P = 250 bar T = 50 bar A, B = 300 bar
10.Leakage	18 cm³/min at 120 bar
11.Nominal flow	80 l/min (see “operating” diagram)
12.Spool stroke	± 7 mm
13.Actuating force	< 220 N in spool axis direction

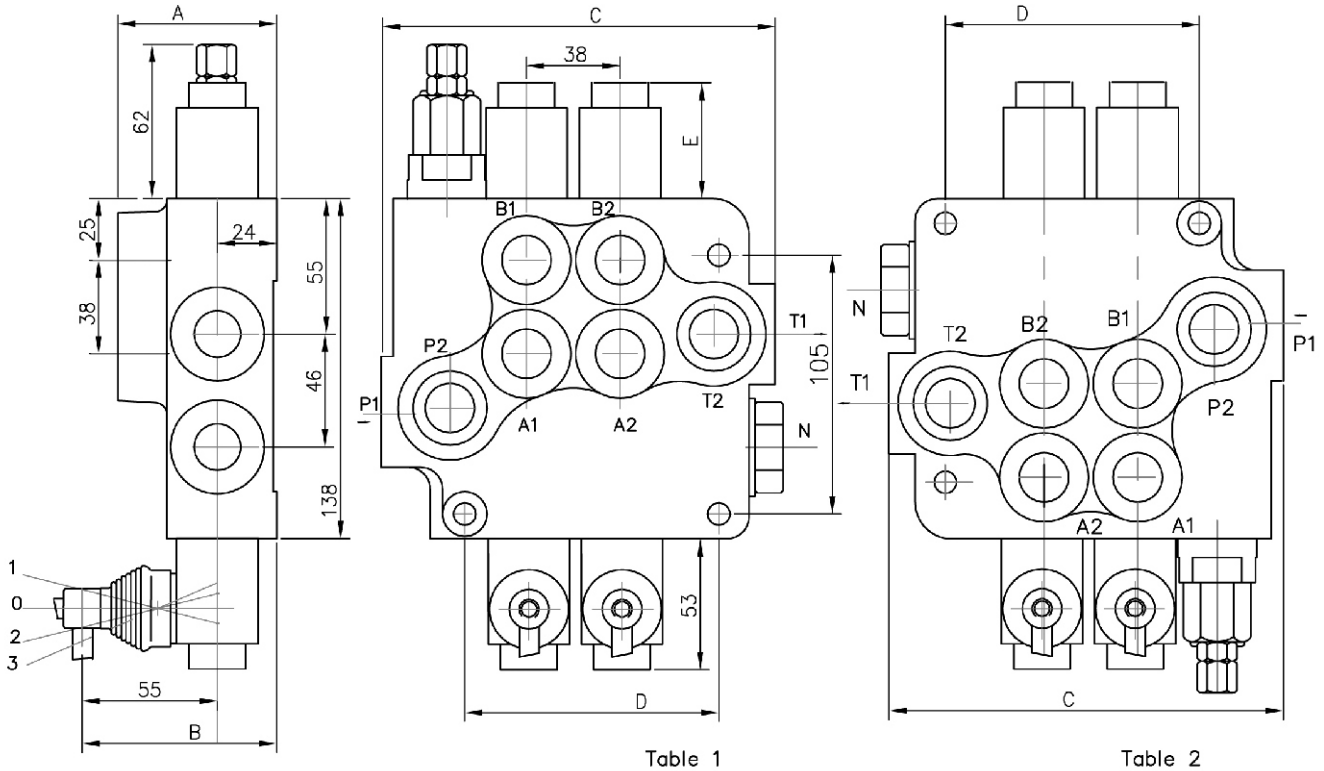

Table 1

	A	B	C	D	P1	P2	T1	T2
P80	65	79	107	65	*	*	–	–
2P80	80	94	160	103	*	*	*	*
3P80	80	94	198	141	*	*	*	*
4P80	80	94	242	179	*	*	*	*
5P80	80	94	280	217	*	*	*	*
6P80	80	94	318	255	*	*	*	*

Table 2

Spool control	E
1, 4, 5, 6, 7, 8, 9, 10, 11,	40
2, 3, 12, 14	72
13	44

0	2	P80	R	1	A	1	A	1	G	KZ1	T	H	E	C2	11
block with common check valve	number of spools	directional control valve type ...	inlet high pressure – right	way of distribution/parallel or .../	first spool distribution type	spool control/detend and ets./	second spool distribution type	spool control/detend and estr./	ports /treads/	general operation feature	with "teton"	operation feature /pneumatic, .../	with electric switsh	high pressure carry over	connection ports in use

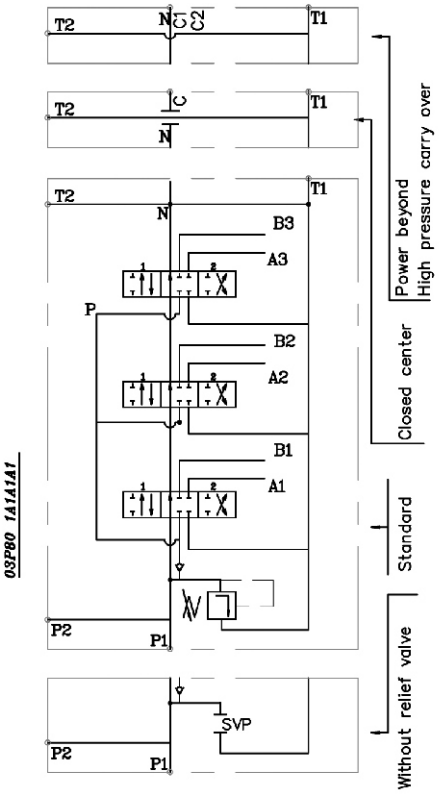

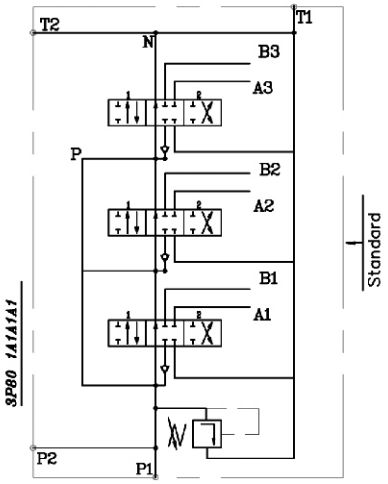

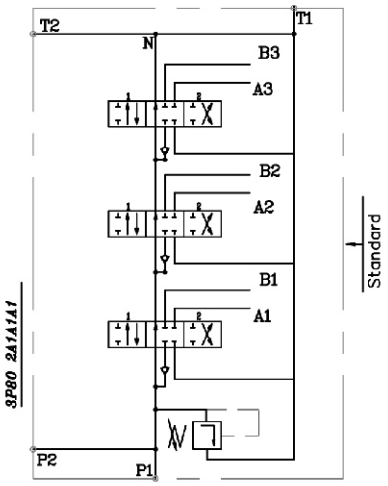

Table 3

code	Number of spools
	1
2	2
3	3

ets.

Table 4

code	way of distribution
1	parallel
2	tandem(series parallel)

Table 5

code	spool type
A	
B	
C	
D	
E	
F	
G	
H	
M	
N	
O	
P	
Q	
R	
S	
T	
L	

Table 6

code	spool control
1	1 0 2
2	1 0 2
3	1 0 2
4	0 2
5	1 0
6	1 2
7	1 2
8	1 0 2
9	1 0
10	0 2
11	1 2
12	1 0 2 3
13	1 0 2 3

Table 7

code	incorporated microswitch	
E		mikroswitch type Omron–V 165 I C5

Table 8

code	operation feature	
P		on–off pneumatic contol; 5–10 bar ; ports G1/4
H		on–off hydraulic control ; pn = 5 – 20 bar ; ports G1/4

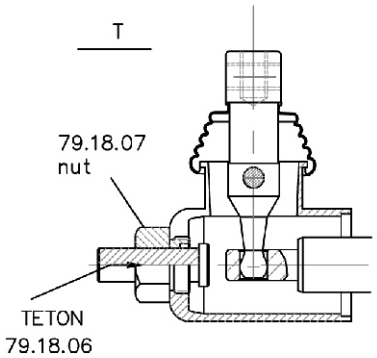

P80 directional control valve

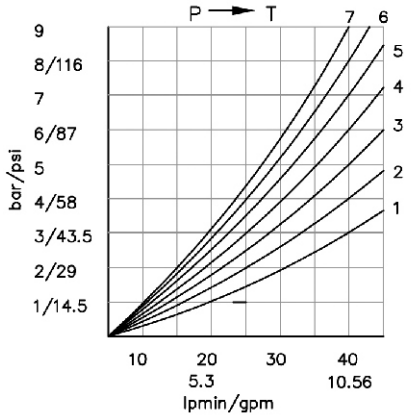

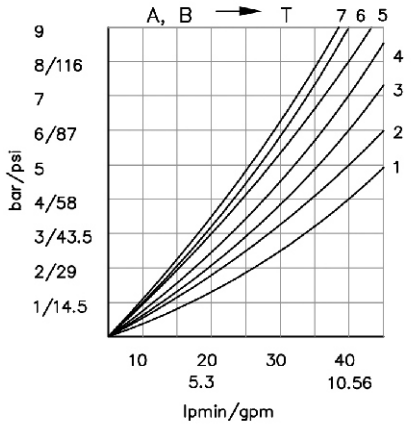

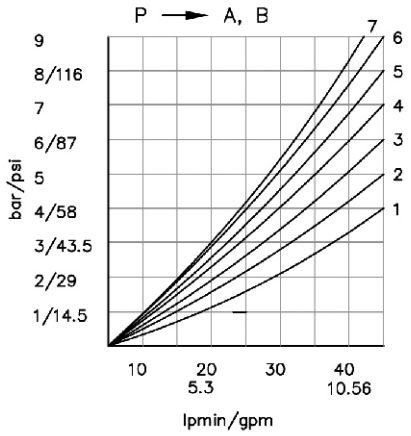

P80

Table 9

code	ports (treads)			
	P	A ; B	T	N
M	M22x1.5	M22x1.5	M26x1.5	M26x1.5
G	G1/2	G1/2	G3/4	G3/4
S	7/8–14UNF	7/8–14UNF	1 1/16–14UNF	1 1/16–14UNF

kind of hand control ;

Table 10

code	feature	code	feature	code	feature
KZ	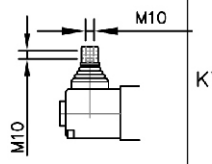	KY	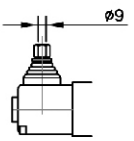	KI	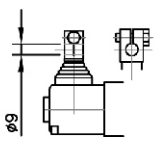
KZ1	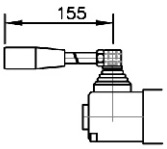	KY1	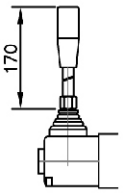	KI1	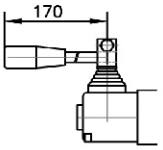
KZ0	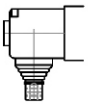	KY0	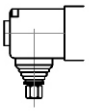	KI0	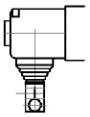
KZ01	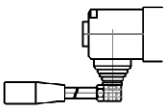	KY01	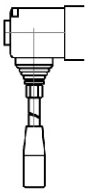	KI01	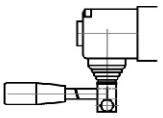
–	without hand control				

Table 11

code		
C	closed center	
C1	part for power beyond sleeve(carry over)	ø14 mm M22x1.5
C2	part for power beyond sleeve(carry over)	G 1/2 M22x1.5
–	without part for pressure carry over	
X	power beyond ever to tank	

Table 12

code	used connection ports
11	P1 ; T1
12	P1 ; T2
21	P2 ; T1
22	P2 ; T2

REMOTE CONTROLS

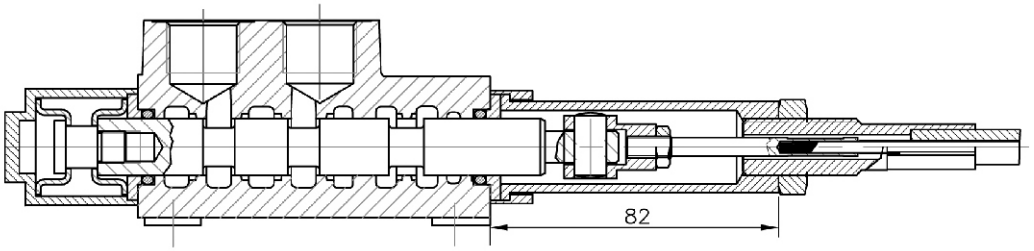

P80 A1G — spool valve
V1(l= . . .)+ — cable
3047 — control body

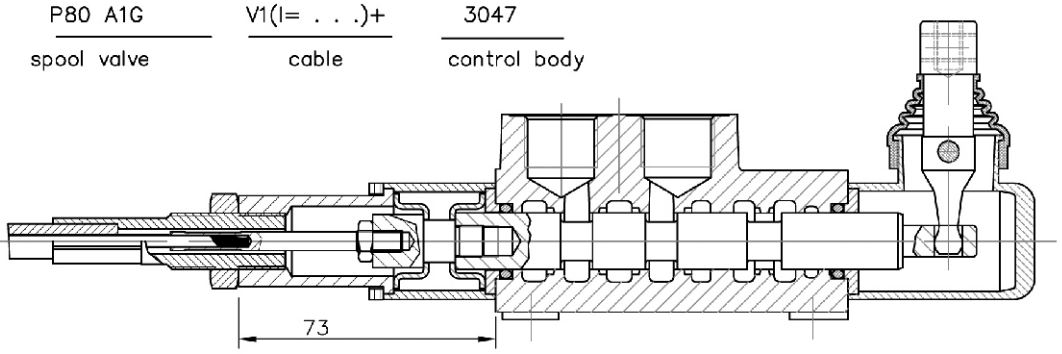

P80 A1G — spool valve
V2KZ1(l= . . .)+ — cable
3047 — control body

Cable "INDEMAR" Cod. IT 3056 /l=1.00; 1.50; 2.00; 2.50; 3.00 m/

+control body "INDEMAR"
code 3047, 3076, 3077

Technical specifications			
	3047	3076	3077
Stroke	13+13 mm	13+13 mm	13+13 mm
Max. load	45 kg	45 kg	45 kg
Level ratio	10:1	10:1	10:1
Lock in neutral	No	No	Yes
Antireverse lock	No	Yes	No
Body colour	Black	Black	Black
Cables type	Heavy Duty	Heavy Duty	Heavy Duty
Operating temperature	−40/+80C	−40/+80C	−40/+80C

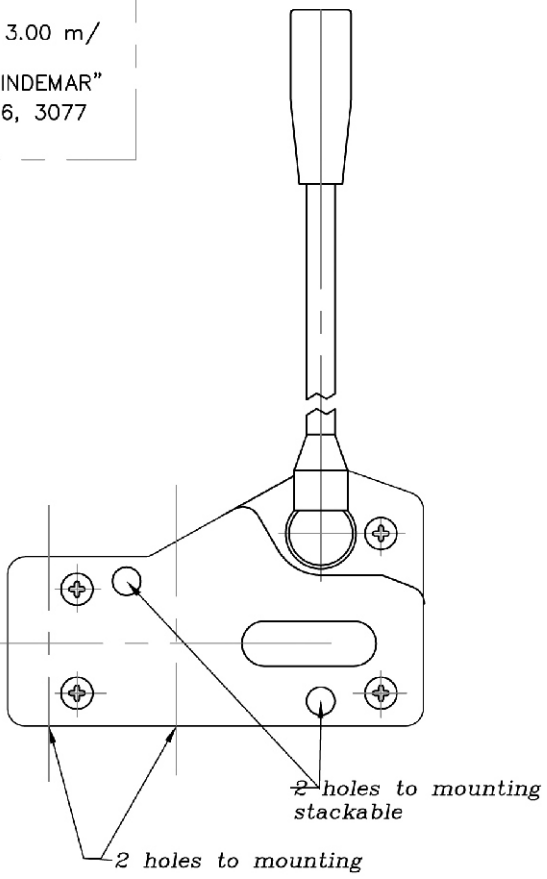

High solidity controls for easy mounting on every type of distributor.They can by mounted stand alone or packed together.
They use push−pull heavy duty cables that provide a positive smooth operating lever and are manifactured in a three differents models to meet different needs of Clients.

JOYSTICK "+"

This control gives the possibility to operate, at the same time two spools with a"+"movement.

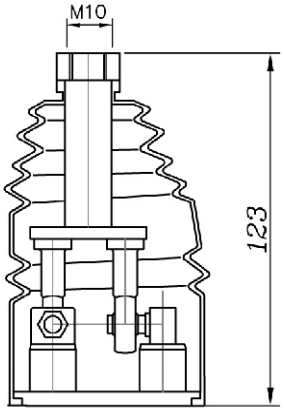

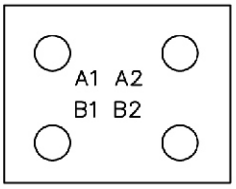

standard version 1

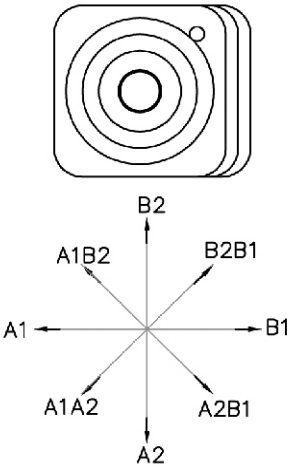

standard version 2

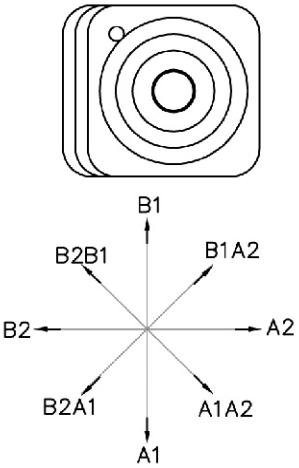

standard version 3

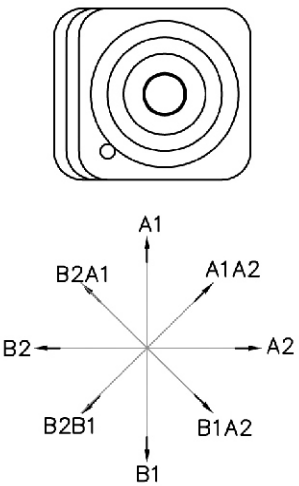

standard version 4

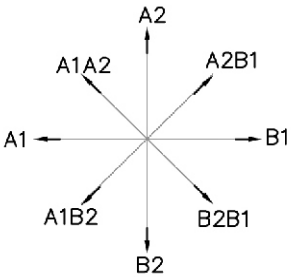

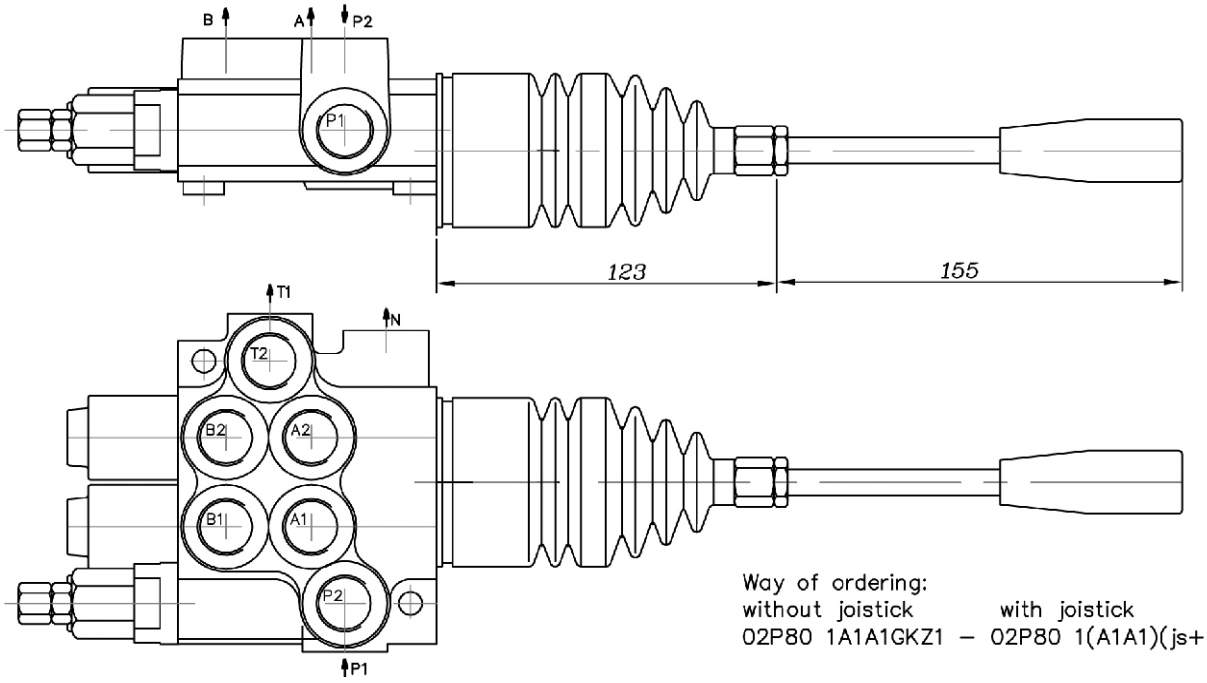

Way of ordering:
without joistick with joistick
02P80 1A1A1GKZ1 – 02P80 1(A1A1)(js+3)G

Description

For starting, controlling and stopping the working fluid between the generator of pressured flow, the consumers and the Tank.

Specifications

1.Valve monoblock	
2.Mounting	3 bolts M10
3.Pressure connections	internal thread внутренние резби
4.Ambient temperature	-40C…+60C
5.Pressure medium	mineral oil based hydraulic oil
6.Viskosity	12…800 mm²/s permissible range 20…100 mm²/s recommended range
7.Fluid temperature	- 15C…+80C
8.Filtration	Oil contamination 10 to NAS1638
9. Max. operating pressure	P = 250 bar T = 50 bar A, B = 300 bar
10.Leakage	30 cm³/min at 120 bar
11.Nominal flow	120 l/min (see “operating” diagram)
12.Spool stroke	± 10 mm, L12 = ± 10 mm +6 mm
13.Actuating force	< 300 N in spool axis direction

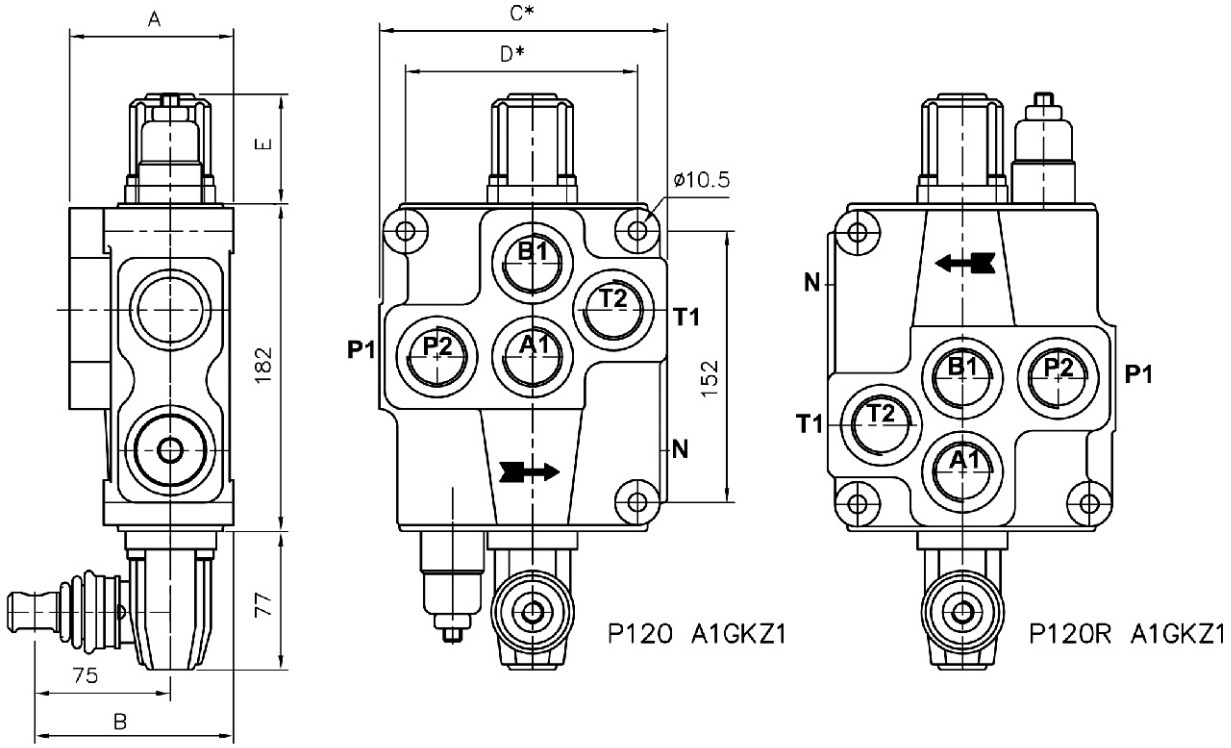

* for each next spool + 53 mm

Table 1

	A	B	C	D	P1	P2	T1	T2
P120	92	110	160	129	+	+	+	+

Table 2

spool control фиксации золотника	E
1; 2, 3, 4; 5; 6; 7; 8; 9; 10; 11;	64
12	74

02 P120 1 A 1 L 12 G KZ1 H E C2 –11

- 02 — number of spools
- P120 — hydraulic directional control valve P120
- 1 — parallel distribution (parallel)
- A — spool type–distribution
- 1 — spool control (table 2)
- L — second spool distribution (table 1)
- 12 — second spool control (table 2)
- G — ports threads (table 5)
- KZ1 — lever options (table 6)
- H — operation features (table 4)
- E — electric microswitch (table 3)
- C2 — cary over center (table 7)
- –11 — conection ports in use (table 8)

02P120 1L12A1

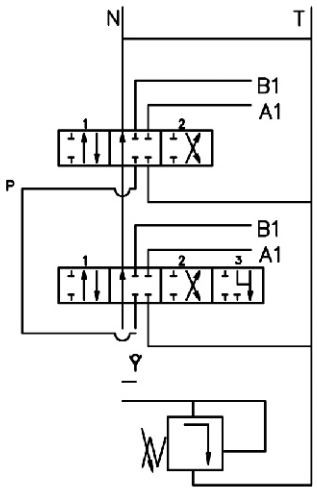

P

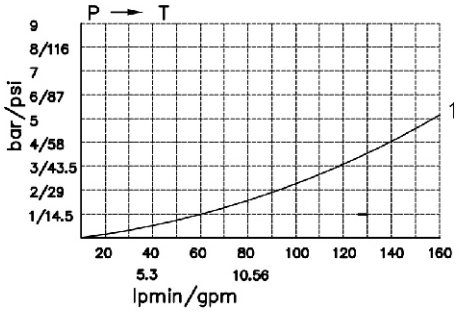

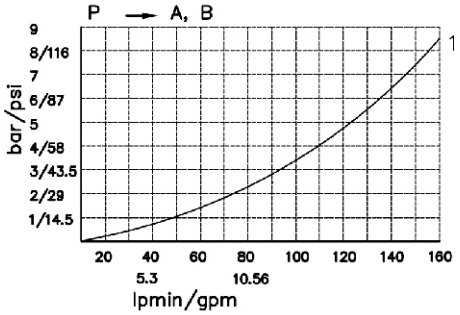

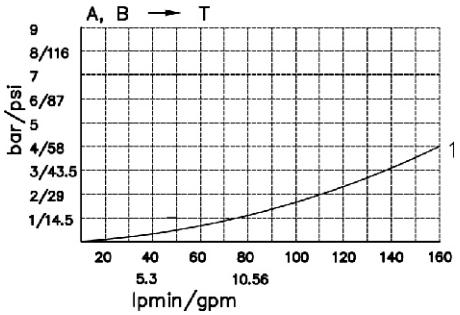

Table 3

code	Number of spools
P	1
02, 2	2
03, 3	3

ets.

Table 4

code	way of distribution
1	parallel
(2)	(tandem(series parallel)

Table 5

code	spool type
A	
B	
C	
D	
E	
F	
G	
H	
M	
N	
O	
P	
Q	
R	
S	
T	
L	

Table 6

code	spool control				
1		1	0	2	
2		1	0	2	
3		1	0	2	
4			0	2	
5		1	0		
6		1		2	
7		1		2	
8				2	
9		1	0		
10					
11					
12		1	0	2	3
13					3

Table 7

code	incorporated microswitch	
E		mikroswitch type Omron–V 165 I C5

Table 8

code	operation feature	
P		on–off pneumatic contol; 5–10 bar ; ports G1/4
H		on–off hydraulic control ; pn = 5 – 20 bar ; ports G1/4

treads for conection

Table 9

outlets/ports/	metric	BSP	SAE	NPT
P, A, B, T	M33x2	G 1"	SAE 16	1 – 11.5
N	M36x1.5	–	–	–

Table 10

code	with thread M12	code	with cange ø12	code	with cange ø12
KZ	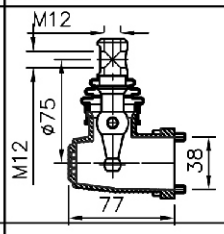	KY	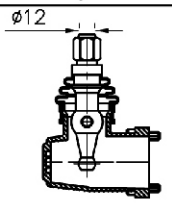	KI	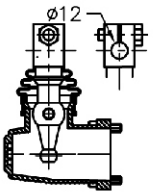
KZ1	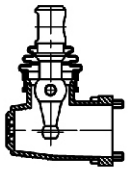	KY1	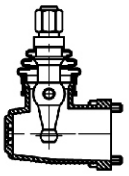	KI1	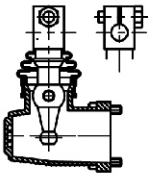
KZ0	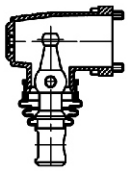	KY0	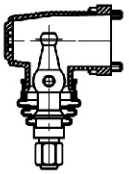	KI0	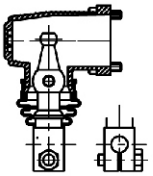
KZ01	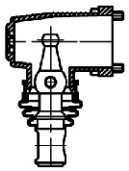	KY01	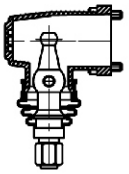	KI01	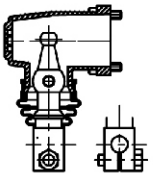

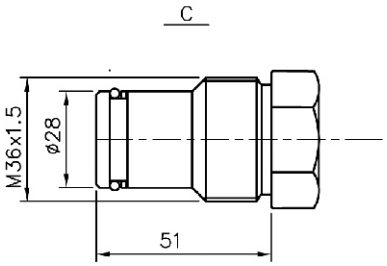

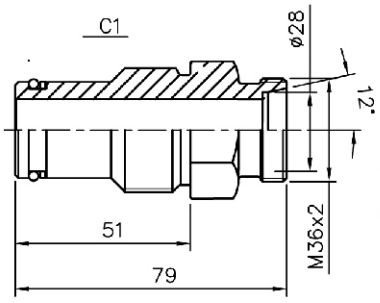

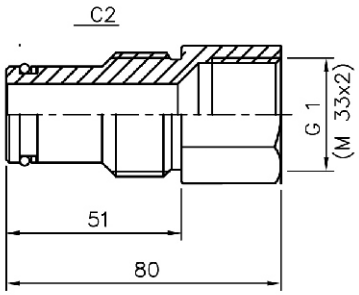

Table 11

code	metric
X	without N
–	with N, but closed
C	with N, closed center
C1	with N –carry over for ermeto
C2	with N–carry over, internal thread

Table 12

code	ports for connection in uze
11	P1 ; T1
12	P1 ; T2
21	P2 ; T1
21	P2 ; T1

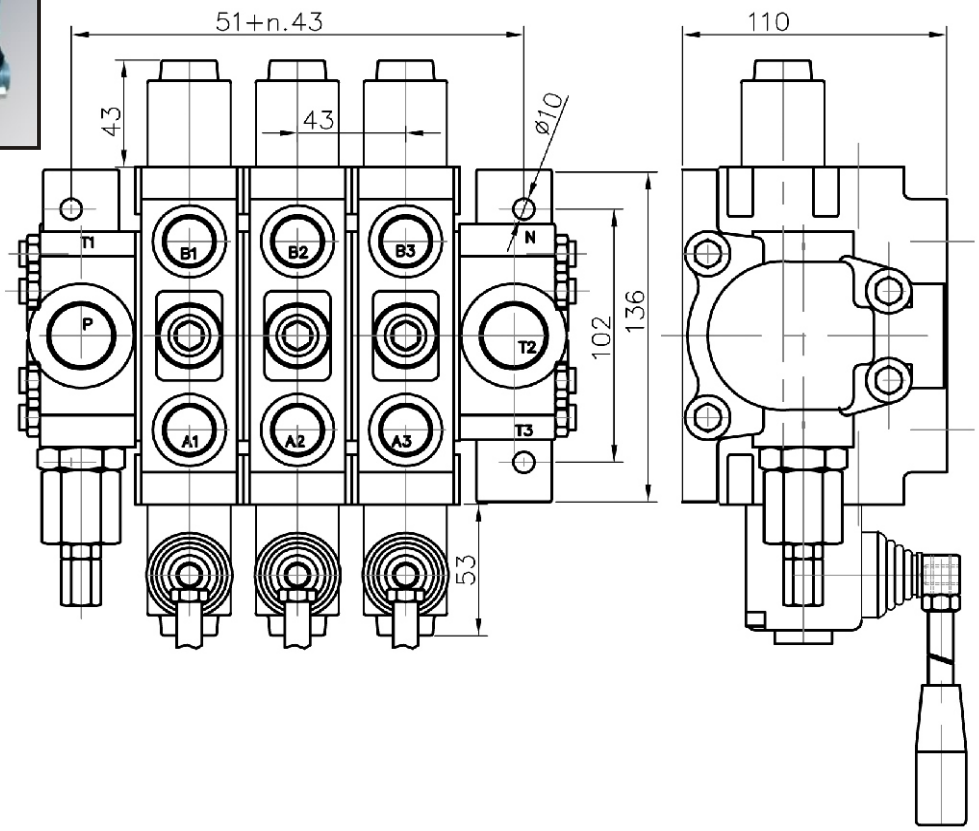

Order code

3	PC70	R	N1	/PA1/PA8AyBz	/PD1/T2	/G	KZ1	P	E	C2	11
number of spools	directional control valve	inlet high pressure – right	type of the inlet cover	first spool distribution type	second spool distribution type	tird spool distribution	type of the outlet cover	threads (P, A, B, T, N)	lever options	operation feature	with microswitsh	high pressure carry over	ports in use

* All detend in operating positions, provided with hydraulic control, have to be ordered explanative.

parallel circuit
3PC70 N1/ PL12/PA1/PA1

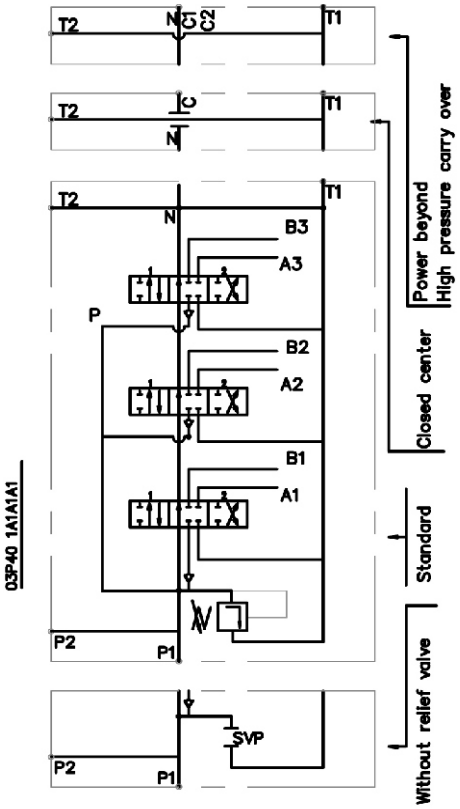

tandem circuit
3PC70 N1/ TL12/TA1/TA1

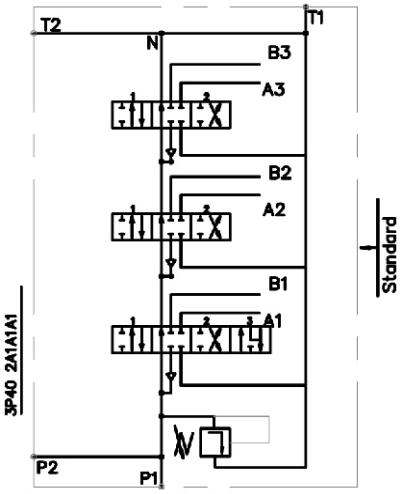

mixed circuit
3PC70 N1/ PL12/PA1/TA1

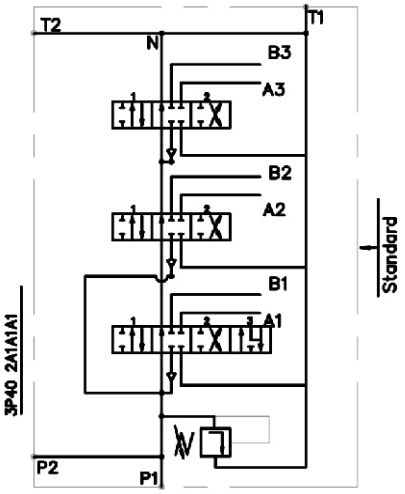

Inlet cover

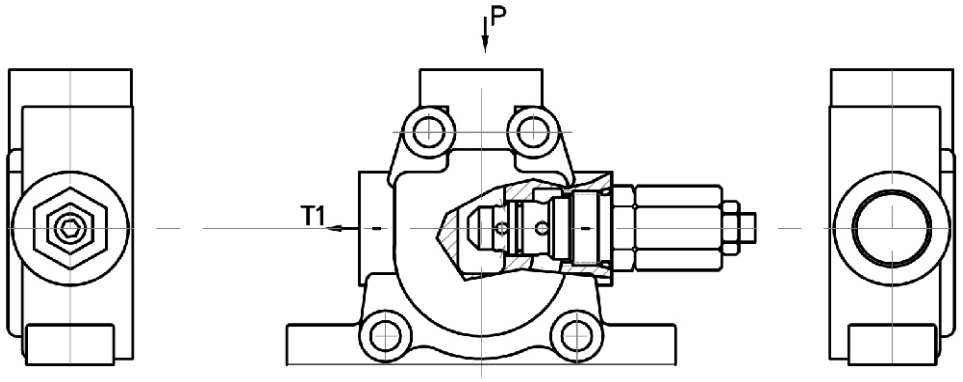

code	inlet cover
N1	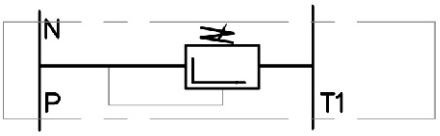
N2	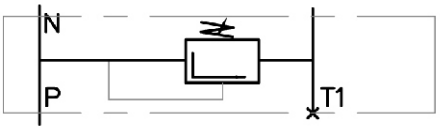
Nsvp	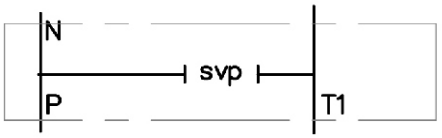

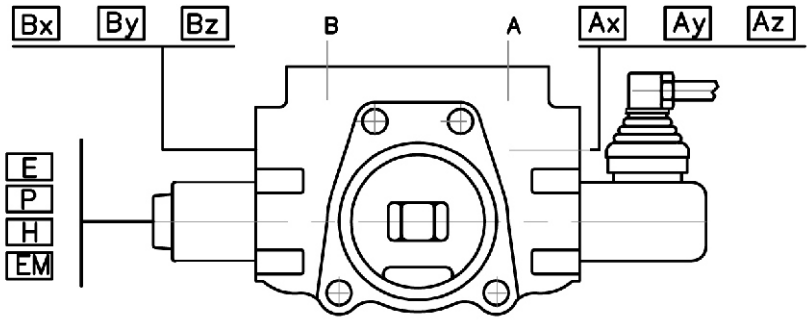

code	spool control
1	1 0 2
2	1 0 2
3	1 0 2
4	0 2
5	1 0
6	1 2
7	1 2
8	1 0 2
9	1 0
10	0 2
11	1 2
12	1 0 2 3
13	1 0 2 3
16	3 1 0 2
18	3 1 0 2

code	spool type
A	
B	
C	
D	
E	
F	
G	
H	
L	
K	

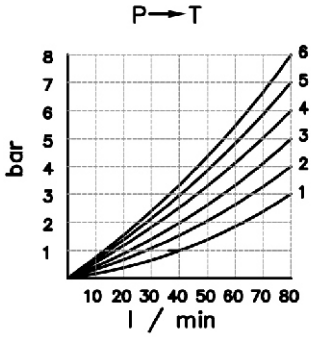

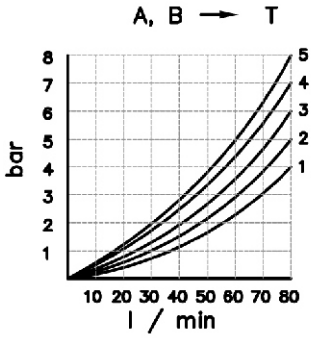

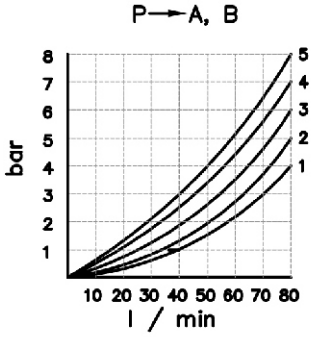

code	threads		code	way of distribution of oil
	P,A,B	T,N	P	parallel
M	M22x1.5	M26x1.5	T	tandem
G	1/2"	3/4"		

code	with electric switch	
E		mikroswitch Omron – V 165 I C5

code	operation feature	
P		pneumatic pn = 6 bar
H		hydraulic pn = 6 – 20 bar

Ax	Bx	anti cavitation valve for A and/or B
Ay	By	sek. pressure relief valve for A and/or B
Az	Bz	shockabsorber valve for A and/or B

anticavitation valve "x"

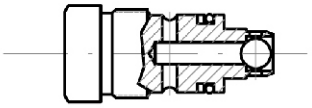

second relief valve "y"

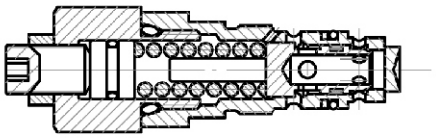

combined part relief and anticavitation valve "z"

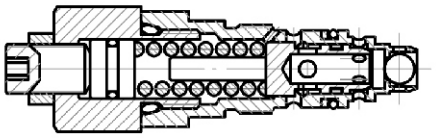

general operation feature

code	feature	code	feature	code	feature
KZ	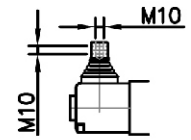	KY	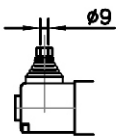	KI	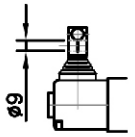
KZ1	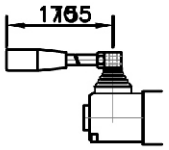	KY1	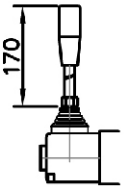	KI1	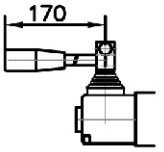
KZ0	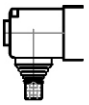	KY0	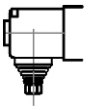	KI0	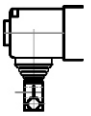
KZ01	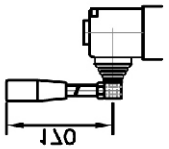	KY01		KI01	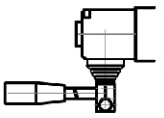
–	without lever system				

end plate

closed center

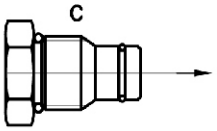

high pressure carry over

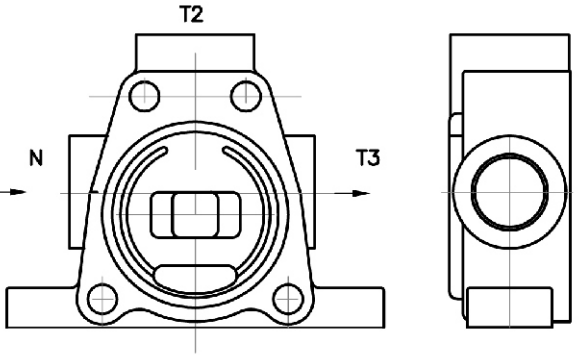

carry over

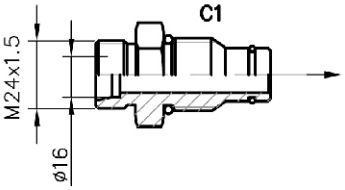

carry over

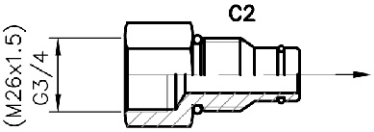

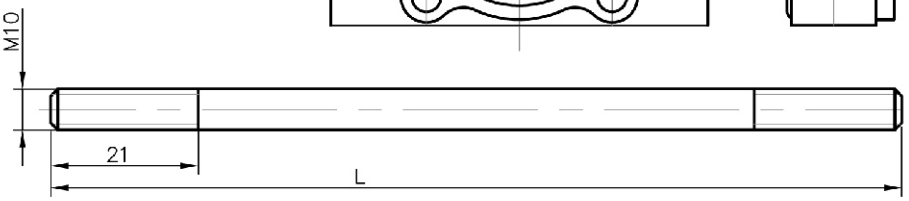

number of spools	1	2	3	4	5	6	7	8
L	145	188	230	275	320	360	405	445

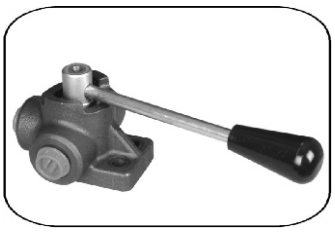

THE DIRECTIONAL CONTROL VALVE of the rotary spool type consists basically of a rotor which is rotated with respect to the valve body. When the rotor is placed in selected positions inlet and outlet ports are connected in various combinations permitting the start, stop or directional change of fluid under pressure. The functions specific to a valve depends primarily on rotor type selected.

SPECIFICATIONS

Ordering code		357	358	359
max. Pressure	bar	300	250	220
max. Flow	l/min	60	90	120

Table 1

	Code 30	Code 31
3 port closed center	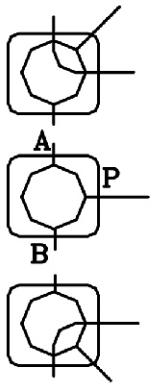	3 port open center 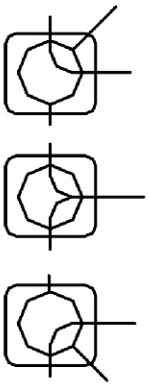

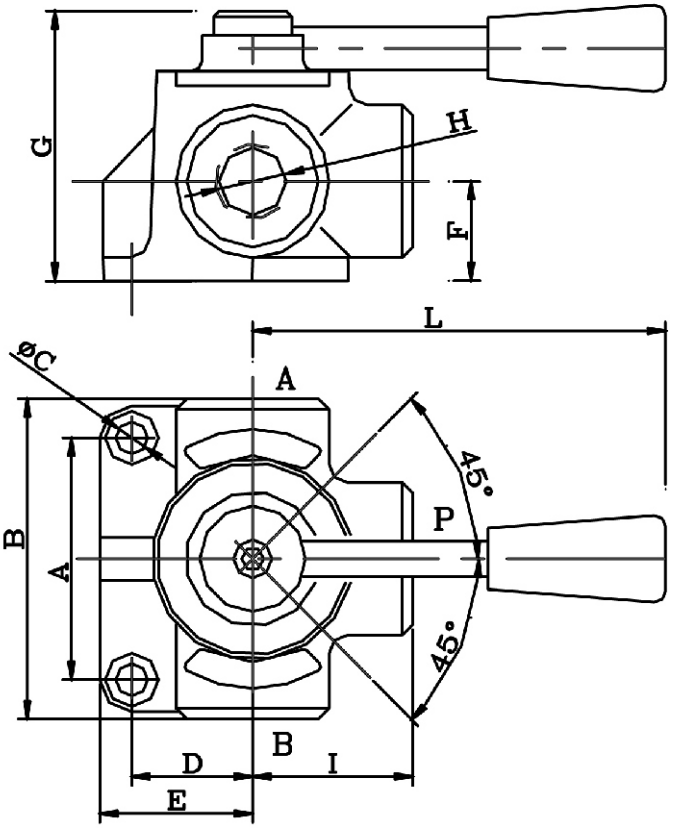

ORDERING CODES

Typical Code 357–30–38

Basic valve
Flow Pattern (Table 1)
Porting 3/8 BSP (Table 2)

Dimensions and weight (Table 2)

Ord.code	A	B	C	D	E	F	G	H	H	H	I	L	Weight
								BSP	NPT	SAE			
357	24	73	8.5	31	42	21	65	3/8	3/8	3/4–16	36	155	0.90
358	30	85	11	36	53	24	70	1/2	1/2	7/8–14	43	150	1.40
359	32	91	11	41	54	28	80	3/4	3/4	1 1/16–12	47	150	1.86

Double Acting - Double Outlets PRB 25/DD PRB 12/DD

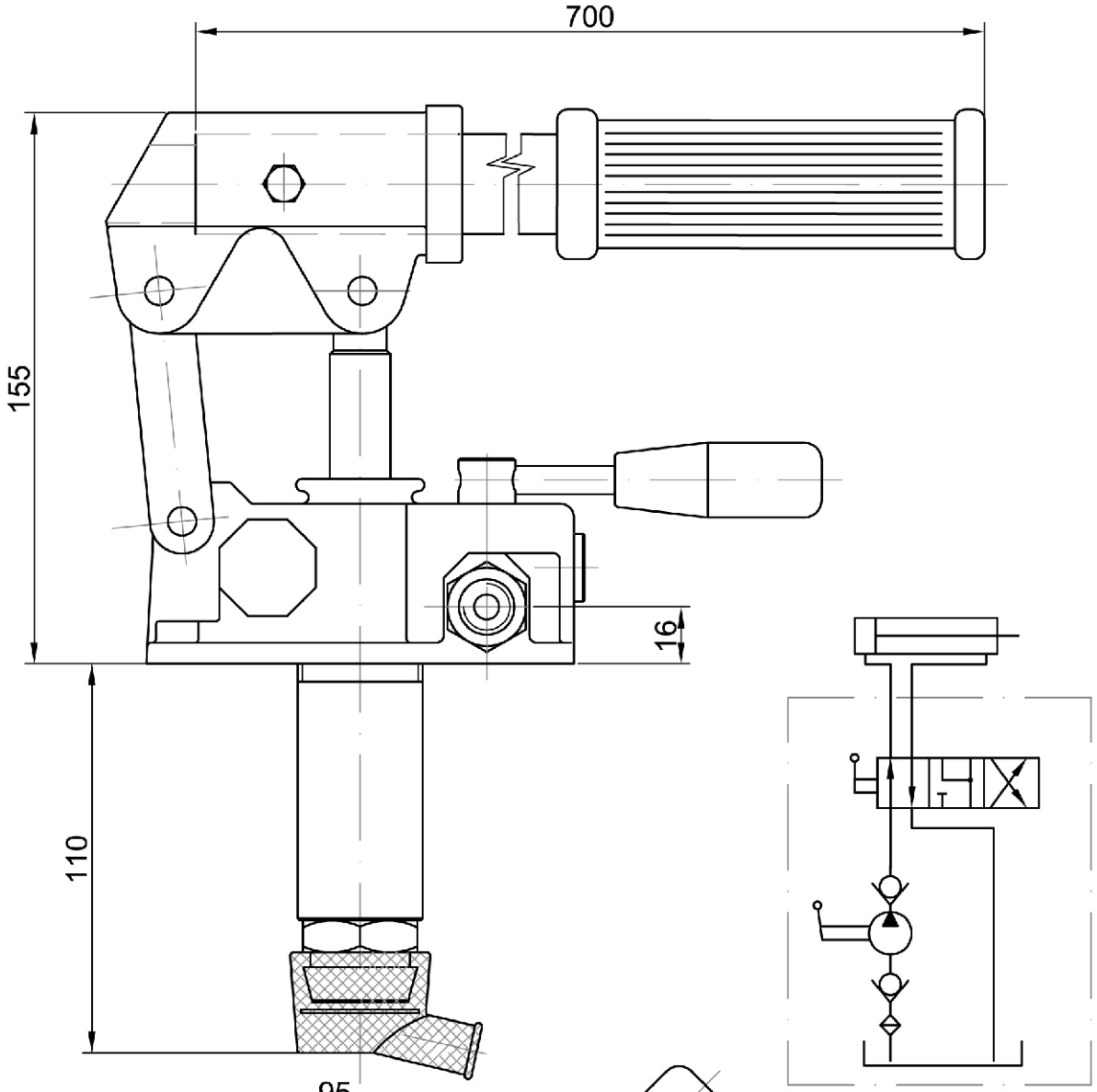

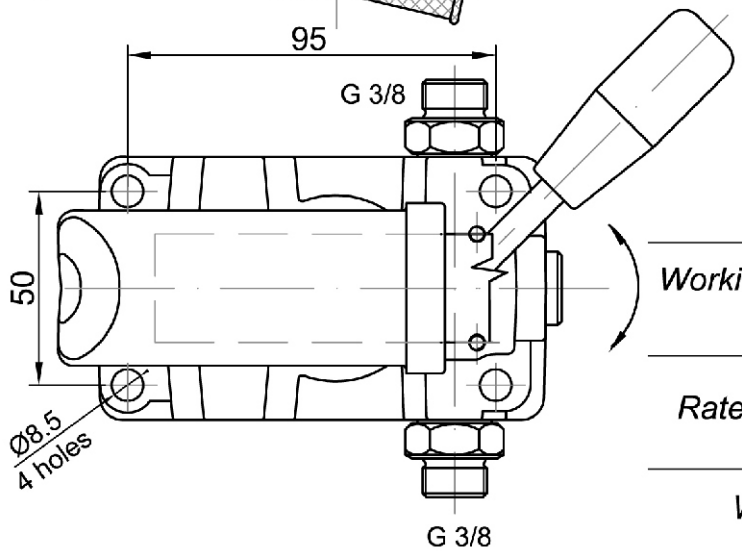

Article №	PRB 25/DD	PRB 12/DD
Working volume (cm^3)	25	12
Rated pressure (bar)	320	320
Weight (kg)	4.2	4.0

Double Acting - Single Outlet PRB 25/DS PRB 12/DS

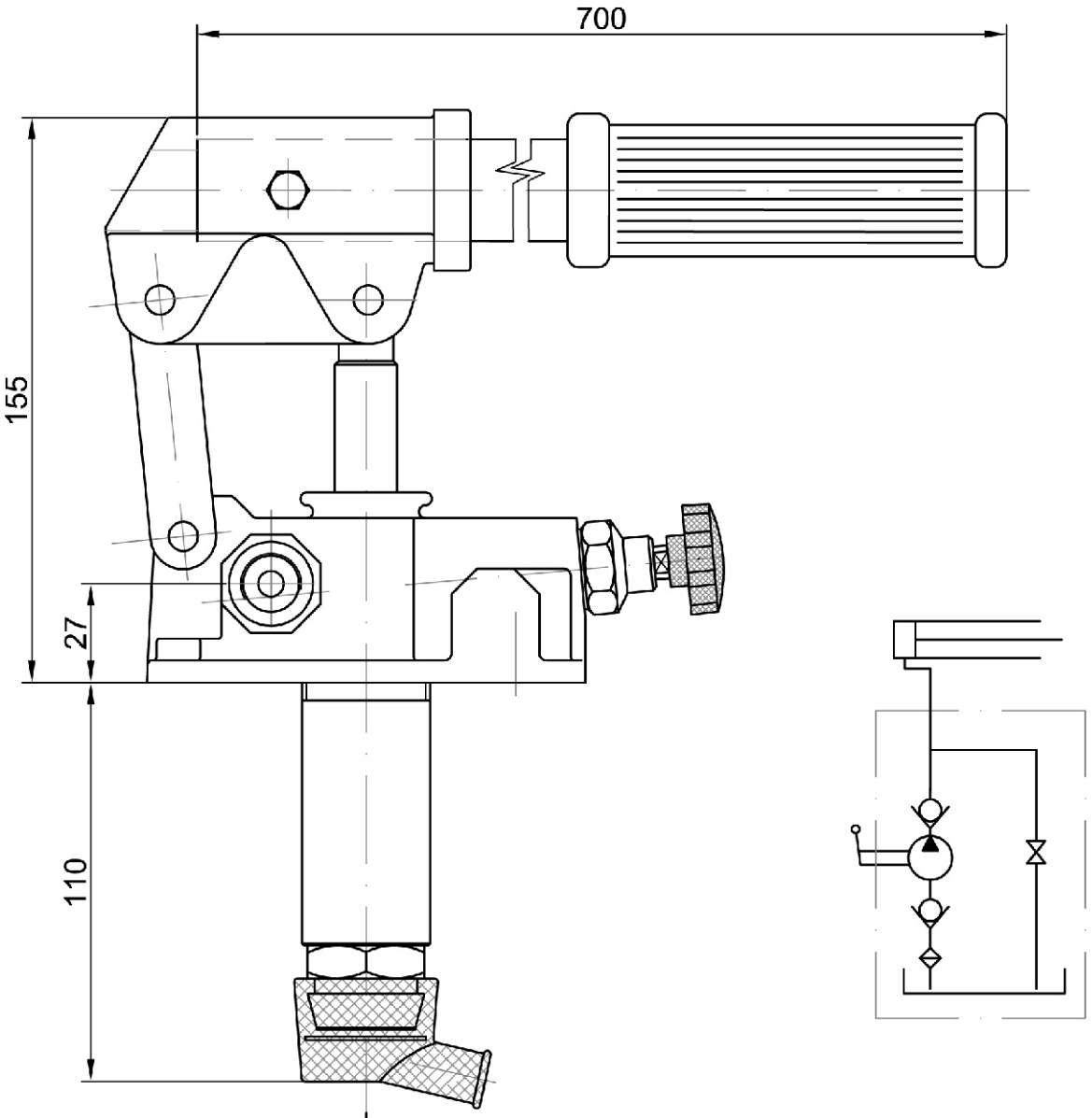

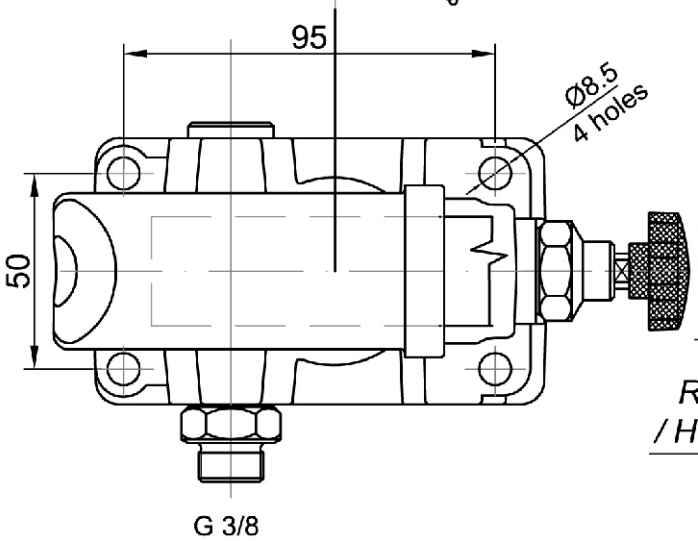

Article № / Означение /	PRB 25/DS	PRB 12/DS
Working volume (cm^3) / Работен обем /	25	12
Rated pressure (bar) / Номинално налягане /	320	320
Weight (kg) / Маса /	4.2	4.0

Single Acting - Single Outlet PRP 12,18,25/SS

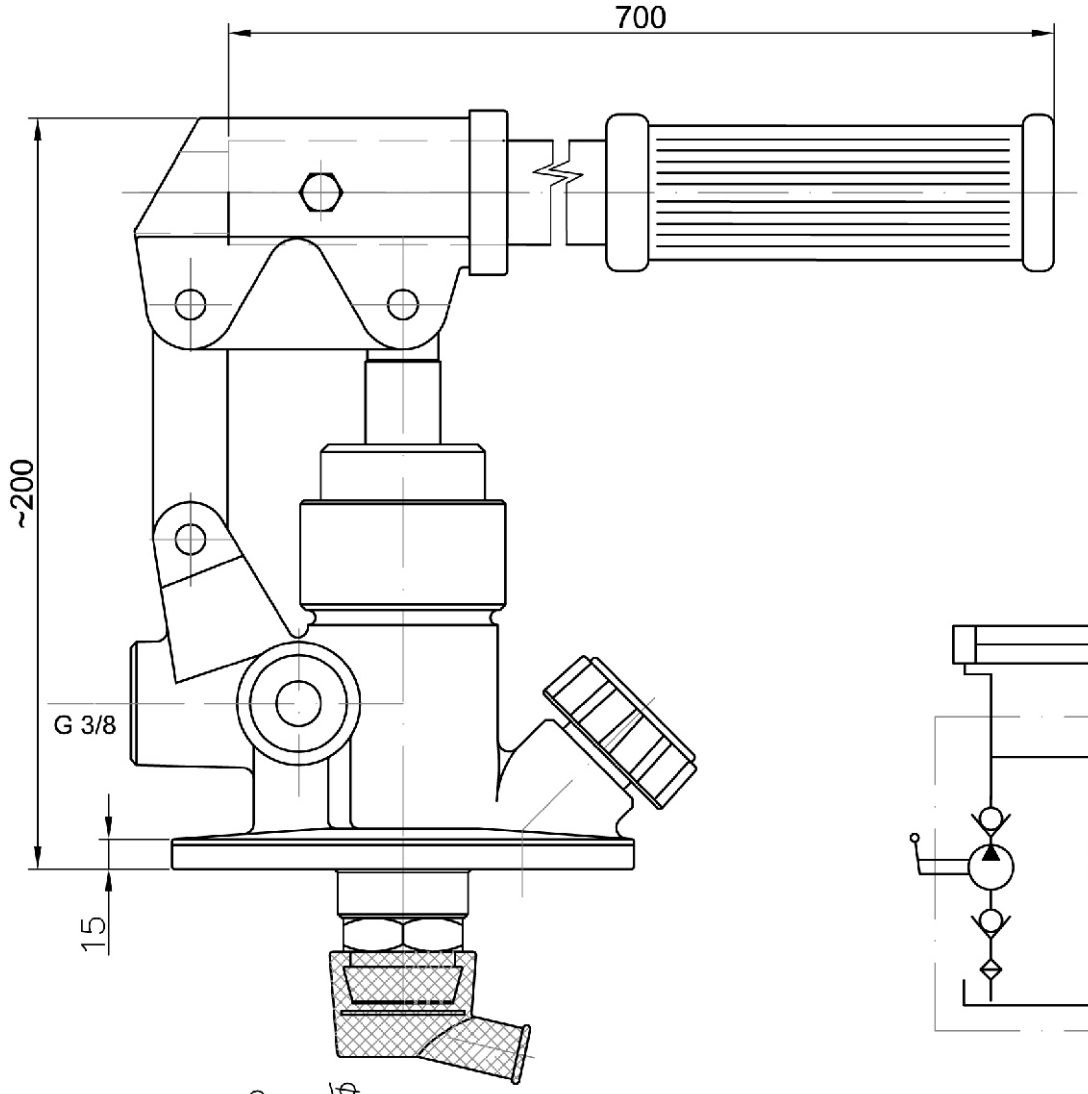

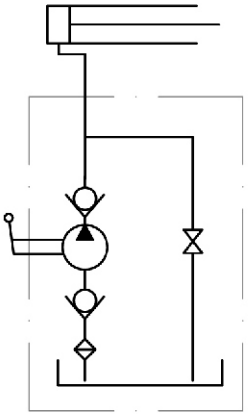

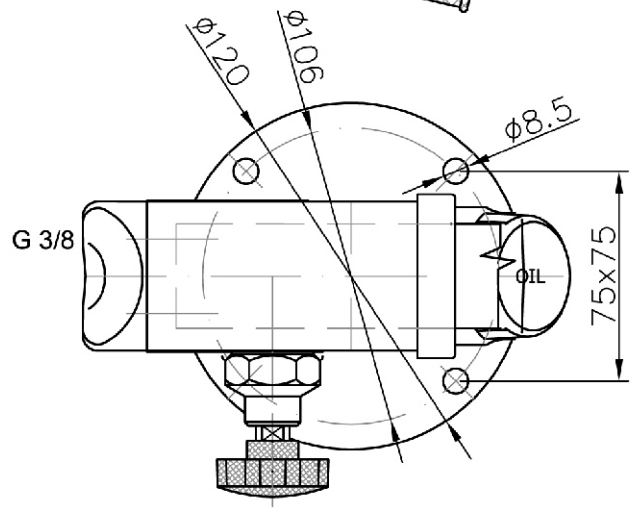

Article №	PRP 12,18,25/SS
Working volume (cm^3)	12,18,25
Rated pressure (bar)	320
Weight (kg)	4,6

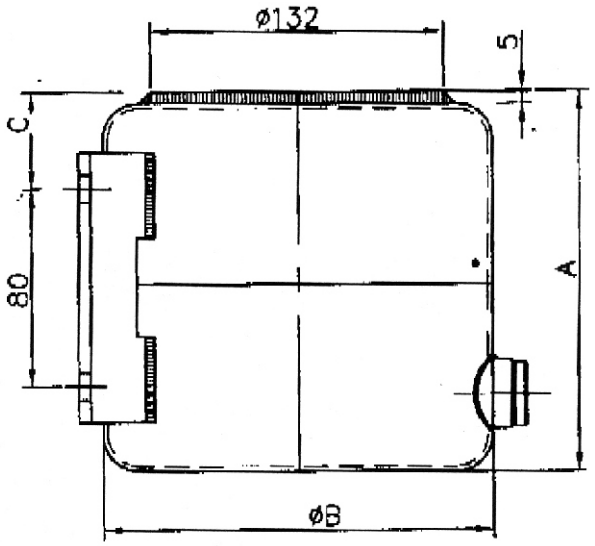

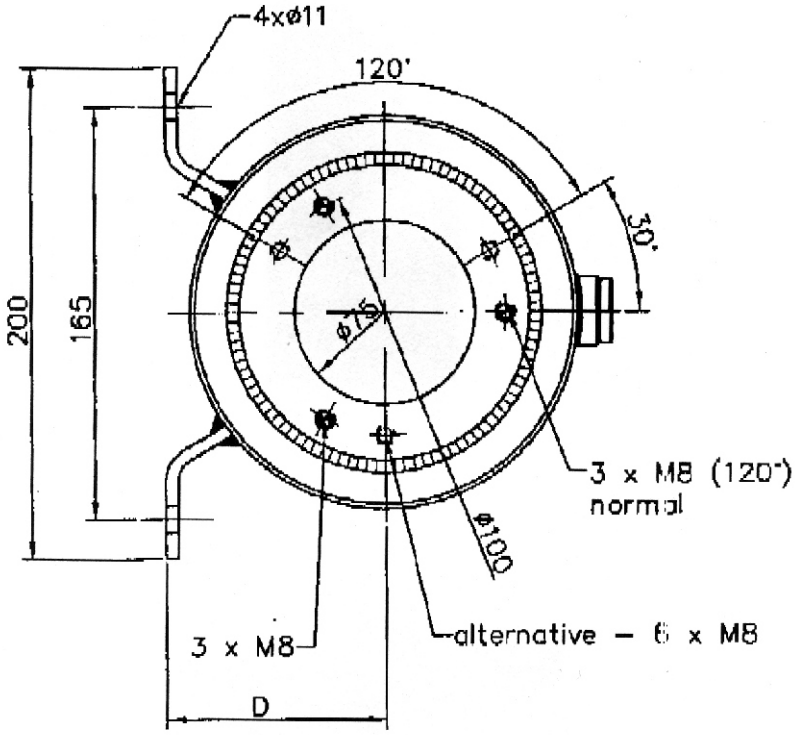

Type		Tank oil	A	B	C	D	kg
R2/3(502–01)	R2/6(502)	2 l	135	160	30	90	2.5
R3/3(416–01)	R3/6(416)	3 l	165	160	40	90	2.8
R5/3(418–01)	R5/6(418)	5 l	215	185	53	106	3.8
R7/3(500–01)	R7/6(500)	7 l	245	205	53	120	4.5

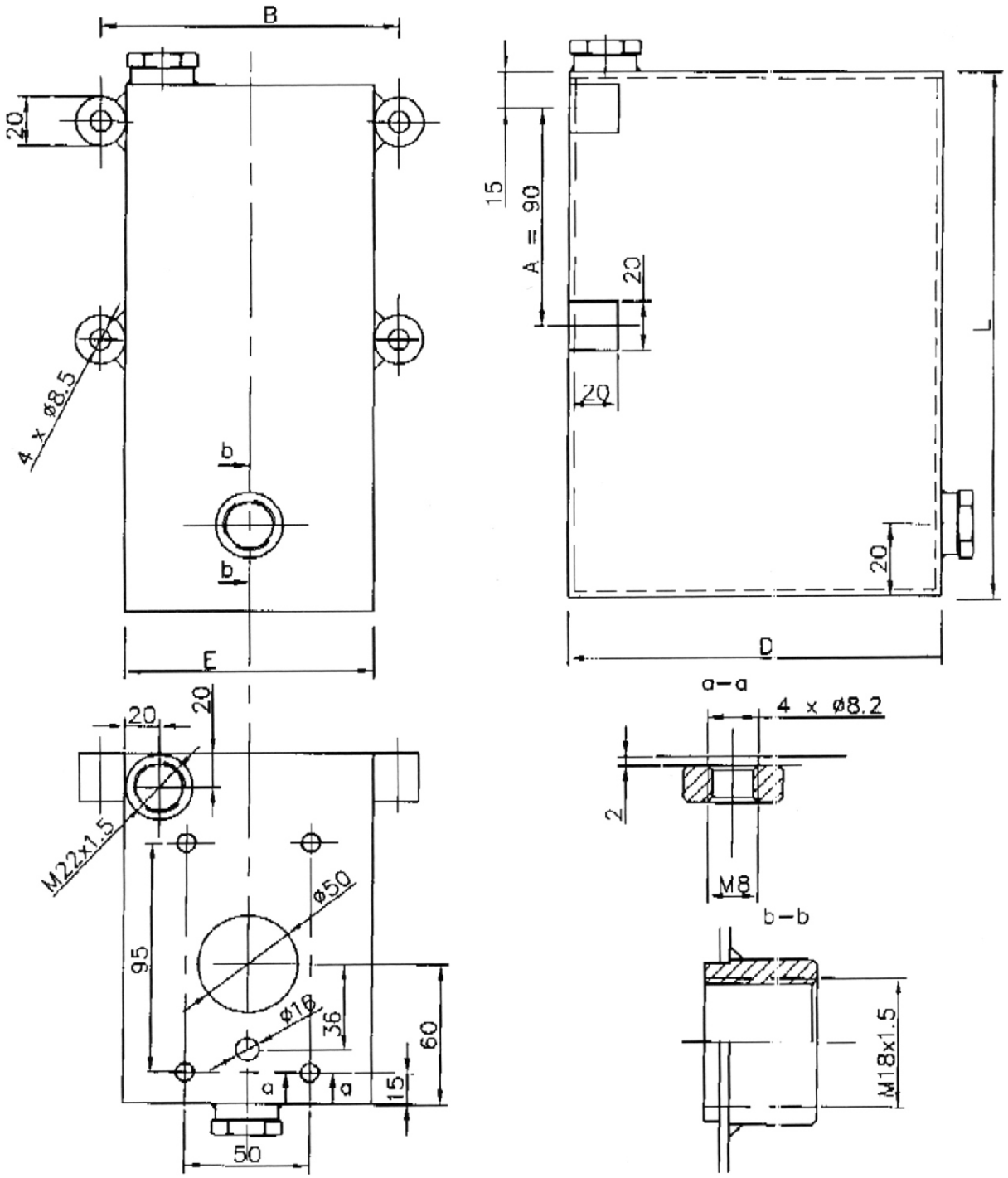

type	tank oil	A	B	D	E	L	kg
RP 1	1 l	90	120	170	100	120	2.0
RP 2	2 l					170	2.2
RP 3	3 l					220	2.5
RP 5	5 l	90	195	175	175	200	4.5
RP 7	7 l					290	5.4

TYPE MRP 70

TECHNICAL DATA

DATA	UNIT	VALUE/RANGE
Rated flow	l/min (US GPM)	70 (18)
Rated pressure	bar (PSI)	210 (3000)
Standard port size: Inlet & outlet work ports A & B	 NPT (BSP) NPT (BSP)	 3/4” (3/4”) 1/2” (3/4”)
Working liquid- hydraulic oils with parameters: -viscosity -viscosity recommended -temperature -degree of filtration	 mm^2/sec (cSt) mm^2/sec (cSt) ° C (°F) mm (in)	 15...300 (15...300) 20...80 (20...80) -20...+80 (-4...+176) 0.025 (9.8^{-4})0

Hydraulic scheme:

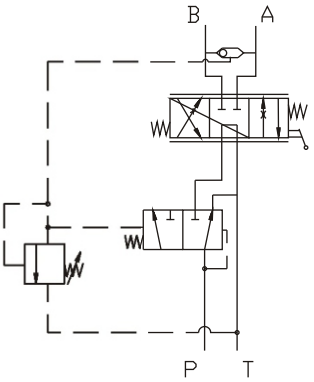

FEATURES:

1. The valve TYPE MRP 70 incorporates the features of a 4-way directional control valve , an adjustable full range pressure compensated by-pass type flow control valve and a pilot operated pressure relief valve all in one compact package.
2. Less fittings and plumbing , eliminates leakage points.
3. Fine positive metering is possible in either direction with one manually adjustable , infinitely variable lever controlling both direction and amount of flow. Amount of flow is proportional to movement of the lever
4. Flow is constant regardless of pressure variations , thus flow out the work port remains smooth and constant regardless of changes in load conditions.
5. An externally adjustable pilot relief is standard.

TYPE MRP 70

PERFORMANCE CURVE

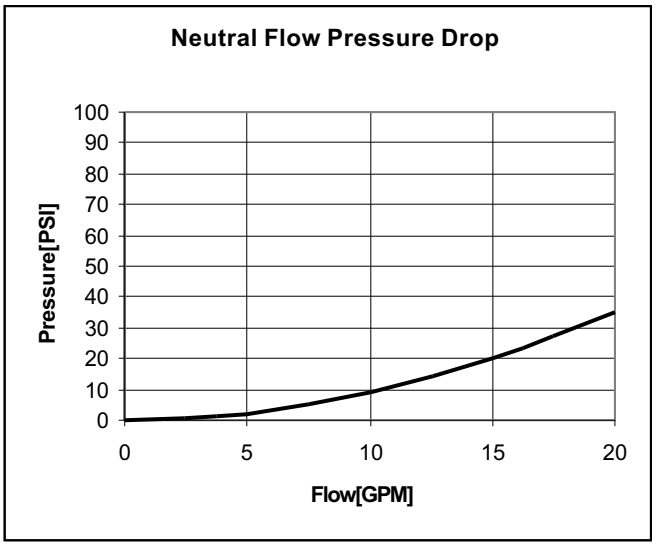

CONDITIONS:
DP=f(Q)
36 cSt oil viscosity
T=40°C(104°F)

In this curve are shown the pressure difference between the inlet and outlet.

DIMENSIONS

Dimensions: All dimensions are in mm (in).

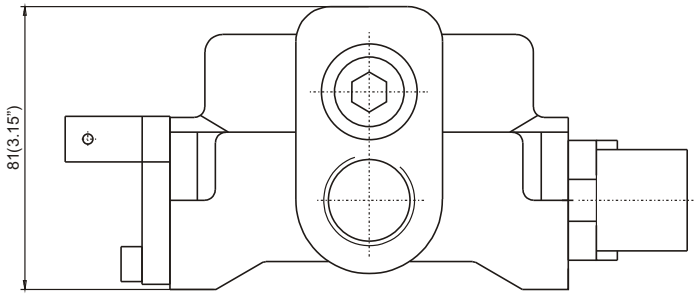

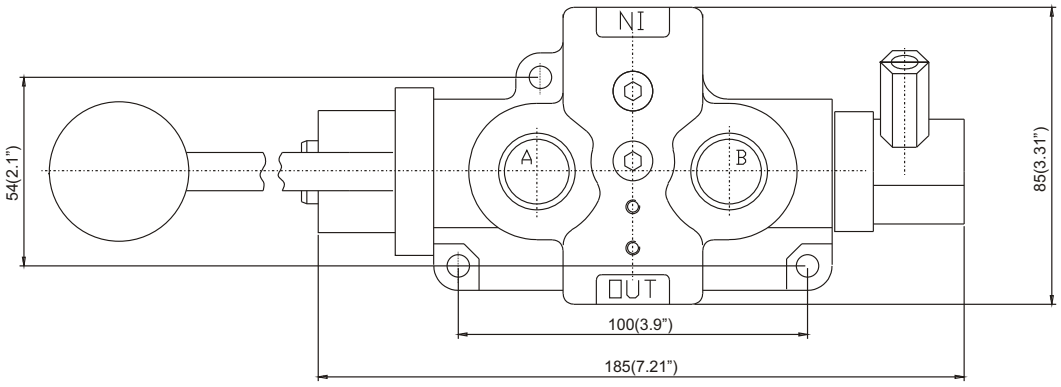

Tandem Center - Powers cylinders or motors in both directions. Pump unloads to tank when spool in neutral. Cylinder or motor blocked when spool in neutral. Designed to be used with Flow Control model.